Company: Joyoung International Trading Co.,Limited
Atten：Smiling
Mobile/WhatsApp/Wechat:+86 18050035902
E-mail: info@htechplc.com
Website: https://www.joyoungintl.com/

WOODWARD

Installation & Hardware Manual

Vertex-Pro
Motor-Driven Compressor Control

Volume 1
Installation & Hardware

Manual 26489 consists of 2 volumes (26489V1 & 26489V2).

Manual 26489V1

IMPORTANT

This is the safety alert symbol. It is used to alert you to potential personal injury hazards. Obey all safety messages that follow this symbol to avoid possible injury or death.

DEFINITIONS

- **DANGER**—Indicates a hazardous situation which, if not avoided, will result in death or serious injury.
- **WARNING**—Indicates a hazardous situation which, if not avoided, could result in death or serious injury.
- **CAUTION**—Indicates a hazardous situation which, if not avoided, could result in minor or moderate injury.
- **NOTICE**—Indicates a hazard that could result in property damage only (including damage to the control).
- **IMPORTANT**—Designates an operating tip or maintenance suggestion.

WARNING

The engine, turbine, or other type of prime mover should be equipped with an overspeed shutdown device to protect against runaway or damage to the prime mover with possible personal injury, loss of life, or property damage.

The overspeed shutdown device must be totally independent of the prime mover control system. An overtemperature or overpressure shutdown device may also be needed for safety, as appropriate.

Read this entire manual and all other publications pertaining to the work to be performed before installing, operating, or servicing this equipment. Practice all plant and safety instructions and precautions. Failure to follow instructions can cause personal injury and/or property damage.

This publication may have been revised or updated since this copy was produced. To verify that you have the latest revision, be sure to check the Woodward website:

www.woodward.com/pubs/current.pdf

The revision level is shown at the bottom of the front cover after the publication number. The latest version of most publications is available at:

www.woodward.com/publications

If your publication is not there, please contact your customer service representative to get the latest copy.

Any unauthorized modifications to or use of this equipment outside its specified mechanical, electrical, or other operating limits may cause personal injury and/or property damage, including damage to the equipment. Any such unauthorized modifications: (i) constitute "misuse" and/or "negligence" within the meaning of the product warranty thereby excluding warranty coverage for any resulting damage, and (ii) invalidate product certifications or listings.

NOTICE

To prevent damage to a control system that uses an alternator or battery-charging device, make sure the charging device is turned off before disconnecting the battery from the system.

NOTICE

To prevent damage to electronic components caused by improper handling, read and observe the precautions in Woodward manual 82715, *Guide for Handling and Protection of Electronic Controls, Printed Circuit Boards, and Modules*.

Woodward Governor Company reserves the right to update any portion of this publication at any time. Information provided by Woodward Governor Company is believed to be correct and reliable. However, no responsibility is assumed by Woodward Governor Company unless otherwise expressly undertaken.

© Woodward 2009

All Rights Reserved

Contents

REGULATORY COMPLIANCE IV

ELECTROSTATIC DISCHARGE AWARENESS VII

CHAPTER 1. GENERAL INFORMATION 1
1.1—Introduction 1
1.2—Specifications and Compatibility 1

CHAPTER 2. VERTEX-PRO SYSTEMS 2
2.1—Vertex-Pro Configurations 2
2.2—Vertex-Pro Redundant 3
2.3—Vertex-Pro Redundant Operation 5
2.4—Vertex-Pro Simplex 6
2.5—Vertex-Pro Simplex Operation 8
2.6—Module Replacement 8
2.7—Latent Fault Detection 8

CHAPTER 3. CHASSIS 10
3.1—MicroNet Plus 8-Slot Chassis 10
3.2—Specification 11
3.3—Installation 13

CHAPTER 4. POWER SUPPLIES 14
4.1—Vertex-Pro Chassis Power Supplies 14
4.2—Installation 16
4.3—Power Supply Troubleshooting 18

CHAPTER 5. CPUS 20
5.1—PowerPC CPU5200 Module (Motorola) 20

CHAPTER 6. DISCRETE I/O MODULES 31
6.1—Introduction 31
6.2—48/24 Discrete Combo Module 31

CHAPTER 7. ANALOG I/O MODULES 38
7.1—Introduction 38
7.2—Combination I/O Modules 38
7.3—24/8 Analog Module 38
7.4—Analog Combo Module (Option) 46

CHAPTER 8. FIELD TERMINATION MODULES (FTMS) 60
8.1—Introduction 60
8.2—Analog I/O FTMs 60
8.3—Discrete I/O FTM 65

CHAPTER 9. INSTALLATION AND REPLACEMENT PROCEDURES 68
9.1—Pre-Installation Information 68
9.2—Installation Procedures 69
9.3—Replacement Procedures 80

CHAPTER 10. SERVICE OPTIONS 86
10.1—Product Service Options 86
10.2—Woodward Factory Servicing Options 87
10.3—Returning Equipment for Repair 88
10.4—Replacement Parts 88
10.5—Engineering Services 89
10.6—How to Contact Woodward 89
10.7—Technical Assistance 90

Contents

APPENDIX A. MATRIX OF MODULES WITH COMPLIANCE INFORMATION 91
APPENDIX B. ENVIRONMENTAL SPECIFICATIONS 92
APPENDIX C. DECLARATIONS.....93
APPENDIX D. ACRONYMS.....98

Illustrations and Tables

Figure 2-1—Input Flow 4
Figure 2-2—Output Flow 4
Figure 2-3—Redundant Sensors.....4
Figure 2-4—Input Flow 7
Figure 2-5—Output Flow 7
Figure 2-6—Redundant Sensors.....7
Figure 2-7—CHAS_STAT Block.....9
Figure 3-1—MicroNet Plus 8-Slot I/O Chassis 10
Figure 3-2—MicroNet Plus 8-Slot Chassis.....11
Figure 3-3—Outline Drawing of MicroNet Plus 8-Slot Chassis 13
Figure 3-4—Mounting Template of MicroNet Plus 8-Slot I/O Chassis 13
Figure 4-1—Power Supply Module.....15
Figure 5-1—CPU Module 21
Figure 5-2—CPU Module Block Diagram.....21
Figure 5-3—CPU Communications Port (DB9F).....25
Figure 5-4—RS-422 Terminator Locations 25
Figure 5-5—RS-485 Terminator Locations 26
Figure 5-6—Termination and Cable Connection Examples.....26
Figure 5-7—Preferred Multipoint Wiring Using Shielded Twisted-Pair Cable with a Separate Signal Ground Wire.....27
Figure 5-8—Alternate Multipoint Wiring Using Shielded Twisted-Pair Cable without a Separate Signal Ground Wire 27
Figure 5-9—CPU Service Port (mini-DIN6F).....28
Figure 5-10—CAN Communication Ports (M12 male) 28
Figure 5-11—CAN Communication Connection Example 29
Figure 6-1—Discrete Combo Module 32
Figure 6-2—Configuration 2, Two 24/12 Discrete FTMs.....33
Figure 6-3—Discrete Input Interface Wiring to a 24/12 Discrete FTM 34
Figure 6-4—Relay Output Interface Wiring to a 24/12 Discrete FTM 35
Figure 6-5—48/24 Discrete Combo Module Block Diagram 36
Figure 7-1—24/8 Analog Module.....39
Figure 7-2—Simplex System Configuration Example 41
Figure 7-3—Analog Input Wiring for a 24/8 Analog FTM 42
Figure 7-4—Analog Output Wiring for a 24/8 Analog FTM 43
Figure 7-5—Analog Combo Module 46
Figure 7-6—Simplex System Configuration Example 49
Figure 7-7—MPU/Proximity Interface Wiring to the Analog Combo FTM 50
Figure 7-8—Current Input Wiring for an Analog Combo Module FTM.....52

Illustrations and Tables

Figure 7-9—Voltage Input Wiring for an Analog Combo Module FTM 53
Figure 7-10—Analog Output and Actuator Wiring for an Analog Combo FTM 55
Figure 8-1—24/8 Analog FTM Outline Dimensions 61
Figure 8-2—24/8 Analog FTM Schematic 62
Figure 8-3—Analog Combo FTM Outline Dimensions 63
Figure 8-4—Analog Combo FTM Schematic 64
Figure 8-5—24/12 Discrete Module Outline Dimensions 66
Figure 8-6—24/12 Discrete Module Schematic.....67
Figure 9-1—MicroNet Power Supply 70
Figure 9-2—FTM Grounding and Outlines 72
Figure 9-3—Shield Termination Diagram Example.....73
Figure 9-4—Discrete FTM Grounding Diagram Example 73
Figure 9-5—Bottom Cable Entry Area.....78
Figure 9-6—Door Bonding.....78
Figure 9-7a—Cable Entry # 1 79
Figure 9-7b—Cable Entry # 2 79
Figure 9-8—Zoning.....80

Table 4-1—MicroNet Plus Power Supply Requirements 17
Table 6-1—LED Indications of Failure 36
Table 7-1—LED Indications of Failure 43
Table 7-2—LED Indications of Failure 55

Regulatory Compliance

European Compliance for CE Marking
These listings are limited only to those units bearing the CE Marking:

EMC Directive:	Declared to 89/336/EEC COUNCIL DIRECTIVE of 03 May 1989 on the approximation of the laws of the Member States relating to electromagnetic compatibility.
Low Voltage Directive:	Declared to 73/23/EEC COUNCIL DIRECTIVE of 10 February 1973 on the harmonization of the laws of the Member States relating to electrical equipment designed for use within certain voltage limits.
ATEX – Potentially Explosive Atmospheres Directive:	Declared to 94/9/EC COUNCIL DIRECTIVE of 23 March 1994 on the approximation of the laws of the Member States concerning equipment and protective systems intended for use in potentially explosive atmospheres. Zone 2, Category 3, Group II G, Ex nA [nL] IIC T3 X

Other European and International Compliance
Compliance with the following European Directives or standards does not qualify this product for application of the CE Marking:

Machinery Directive:	Compliant as a component with 98/37/EC COUNCIL DIRECTIVE of 23 July 1998 on the approximation of the laws of the Member States relating to machinery.
GOST-R:	Certified for use in ordinary locations within the Russian Federation per GOST-R certificates РОСС US. US.МЛ03.В00603 and РОСС US. US.МЛ03.В00604

IMPORTANT **This equipment is considered indicator equipment and is not to be used as metrology equipment. All measurements need to be verified using calibrated equipment.**

North American Compliance
These listings are limited only to those units bearing the UL identification:

UL:	UL Listed for Class I, Division 2, Groups A, B, C, & D, T3A at 65 °C surrounding air temperature. For use in Canada and the United States. UL File E156028 The 16-channel relay interface modules are suitable for ordinary or non-hazardous locations only.

Marine

American Bureau of Shipping:	ABS Rules 2002 SVR 4-2-1/7.3, 4-2-1/7.5.1, 4-9-3/17, 4-9-7/13, 4-9-2/11.7 & 4-9-4/23
Det Norske Veritas:	Standard for Certification No. 2.4, 2006: Temperature Class A, Humidity Class B, Vibration Class B, and EMC Class A
Lloyd's Register of Shipping:	LR Type Approval Test Specification No. 1, 2005 for Environmental Categories ENV1 and ENV2

This equipment is suitable for use in Class I, Division 2, Groups A, B, C, D T3A at 65 °C surrounding air temperature per UL for Canada and US or ordinary locations only.

This equipment is suitable for use in European Zone 2, Group IIC environments when installed in an IP54 minimum rated enclosure per self-declaration to EN 60079-15.

Wiring must be in accordance with North American Class I, Division 2, or European Zone 2, Category 3 wiring methods as applicable, and in accordance with the authority having jurisdiction.

Product listings are limited only to those units bearing the UL or CE logos.

Special Conditions for Safe Use

A fixed wiring installation is required.

Ground leakage current exceeds 3.5 mA.

Grounding is required by the input PE terminal.

A switch or circuit breaker shall be included in the building installation that is in close proximity to the equipment and within easy reach of the operator and that is clearly marked as the disconnecting device for the equipment.

Field wiring must be suitable for at least 80 °C for operating ambient temperatures expected to exceed 55 °C.

For ATEX compliance, this equipment must be installed in an area providing adequate protection against the entry of dust or water. A minimum ingress protection rating of IP54 is required for the enclosure. This enclosure shall also provide protection against impact according to Sub-Clause 26.3.3.1 of EN60079-15:2003.

For ATEX compliance, this equipment must be protected externally against transient disturbances. Provisions shall be made to prevent the power input from being exceeded by transient disturbances of more than 40% of the rated voltage.

CPU modules contain internal energy limited circuits. These circuits have no external connections and are not affected by module loading.

CPU modules contain single cell primary batteries. These batteries are not to be charged and are not customer replaceable.

For environmental specifications, please refer to the appropriate appendix in Volume 2 of this manual.

⚠WARNING

EXPLOSION HAZARD—Do not connect or disconnect while circuit is live unless area is known to be non-hazardous.

Substitution of components may impair suitability for Class I, Division 2 applications.

Do not remove or install power supply while circuit is live unless area is known to be non-hazardous.

Do not remove or install modules while circuit is energized unless area is known to be non-hazardous.

⚠AVERTISSEMENT

RISQUE D'EXPLOSION—Ne pas raccorder ni débrancher tant que l'installation est sous tension, sauf en cas l'ambiance est décidément non dangereuse.

La substitution de composants peut rendre ce matériel inacceptable pour les emplacements de Classe I, applications Division 2.

Ne pas enlever ni installer l'alimentation électrique pendant que le circuit est sous tension avant de s'assurer que la zone est non dangereuse.

Ne pas enlever ni installer les cartes pendant que le circuit est sous tension à moins de se trouver dans un emplacement non dangereux.

Electrostatic Discharge Awareness

All electronic equipment is static-sensitive, some components more than others. To protect these components from static damage, you must take special precautions to minimize or eliminate electrostatic discharges.

Follow these precautions when working with or near the control.

1. Before doing maintenance on the electronic control, discharge the static electricity on your body to ground by touching and holding a grounded metal object (pipes, cabinets, equipment, etc.).

2. Avoid the build-up of static electricity on your body by not wearing clothing made of synthetic materials. Wear cotton or cotton-blend materials as much as possible because these do not store static electric charges as much as synthetics.

3. Keep plastic, vinyl, and Styrofoam materials (such as plastic or Styrofoam cups, cup holders, cigarette packages, cellophane wrappers, vinyl books or folders, plastic bottles, and plastic ash trays) away from the control, the modules, and the work area as much as possible.

4. Do not remove the printed circuit board (PCB) from the control cabinet unless absolutely necessary. If you must remove the PCB from the control cabinet, follow these precautions:

   - Do not touch any part of the PCB except the edges.

   - Do not touch the electrical conductors, the connectors, or the components with conductive devices or with your hands.

   - When replacing a PCB, keep the new PCB in the plastic antistatic protective bag it comes in until you are ready to install it. Immediately after removing the old PCB from the control cabinet, place it in the antistatic protective bag.

NOTICE

To prevent damage to electronic components caused by improper handling, read and observe the precautions in Woodward manual 82715, *Guide for Handling and Protection of Electronic Controls, Printed Circuit Boards, and Modules*.

Chapter 1. General Information

1.1—Introduction

The Vertex-Pro is a microprocessor-based control with integral application software designed to control a motor and its one or two-loop compressor load. Three and four loop compressor stages may be an option for some systems. The compressor control architecture is patterned after the 505CC-2 compressor control. The compressor anti-surge control provides the user with a choice between two algorithms—the standard Woodward anti-surge algorithm or a universal surge curve design. The standard algorithm compensates for changing gas/process conditions, while the universal algorithm uses an invariant coordinate system that is immune to such changes. Like the 505CC-2, the Vertex-Pro uses configurable software for maximum field flexibility.

The control hardware uses the MicroNet™ Plus. The MicroNet Plus is a 32-bit microprocessor-based digital and a VME-based controller, modular control system with redundant or simplex CPU, power supply and I/O module options. CPUs and I/O modules may be simplex or redundant, depending on customer requirements. A simplex system can be upgraded to redundant system by simply adding a second CPU and I/O modules and changing a minor software configuration. I/O modules allow for hot replacement without removing control power.

The MicroNet Operating System, together with Woodward's GAP™ Graphical Application Program, produces a powerful control environment. Woodward's unique rate group structure ensures that control functions will execute deterministically at rate groups defined by the application engineer. Critical control loops can be processed within 5 milliseconds. Less critical code is typically assigned to slower rate groups. The rate group structure prevents the possibility of changing system dynamics by adding additional code. Control is always deterministic and predictable.

Communications with the MicroNet platform are available to program and service the control as well as to interface with other systems (Plant DCS, HMI, etc.). Application code is generated by use of Woodward's GAP program or Woodward's Ladder Logic programming environment. A service interface allows the user to view and tune system variables. Several tools are available to provide this interface (see Engineering and Service Access). Communication protocols such as TCP/IP, OPC, Modbus® *, and other current designs are included so that the user can correctly interface the control to existing or new plant level systems.

*—Modbus is a trademark of Schneider Automation Inc.

1.2—Specifications and Compatibility

For environmental specifications and MicroNet compatibility information, please refer to the appropriate appendix in this manual.

Chapter 2.
Vertex-Pro Systems

2.1—Vertex-Pro Configurations

The Vertex-Pro controls family is developed around the VME chassis and a CPU module that goes into the first active slot of the VME chassis. All I/O modules plug into the remaining slots of the VME chassis.

The Vertex-Pro offers both simplex (single Power-supply, CPU and I/O modules) and redundant (dual Power-supply, CPU and I/O modules) operation with up to 8 VME slots per chassis. The Vertex-Pro comes with the following options regarding power supply voltage and cabinets.

System Config	Parts Number	Power Supply Voltage	Cabinet
Redundancy	8263-0109	110 Vac/dc	x
	8262-3026	110 Vac/dc	-
	8263-0115	24 Vdc	x
	8262-3028	24 Vdc	-
	8263-0117	220 Vac	x
	8262-3030	220 Vac	-
Simplex	8263-0110	110 Vac/dc	x
	8262-3027	110 Vac/dc	-
	8263-0116	24 Vdc	x
	8262-3029	24 Vdc	-
	8263-0118	220 Vac	x
	8262-3031	220 Vac	-

x: with non EMI cabinet

For critical applications requiring increased reliability and availability, users can order dual-redundant control models, which have manual switch-over and automatic fail-over capabilities. These redundant control models also allow users to replace/repair modules and perform program changes while the compressor is operating on-line, thus greatly improving system availability.

IMPORTANT

Analog combo modules can be chosen as an option of the Vertex-Pro. If the analog combo module is chosen, a maximum three speed signals are directly acceptable from a magnetic pick-up or proximity probe. Please refer to section 7.4 in this manual for details.

2.2—Vertex-Pro Redundant

2.2.1—System Diagram

Vertex-Pro Redundant

- MicroNet 8 VME Slot Chassis
- Dual CPUs for redundant operation
- Motorola PowerPC CPU5200
- Redundant I/O modules
- Redundant Power
- Redundant smart fans

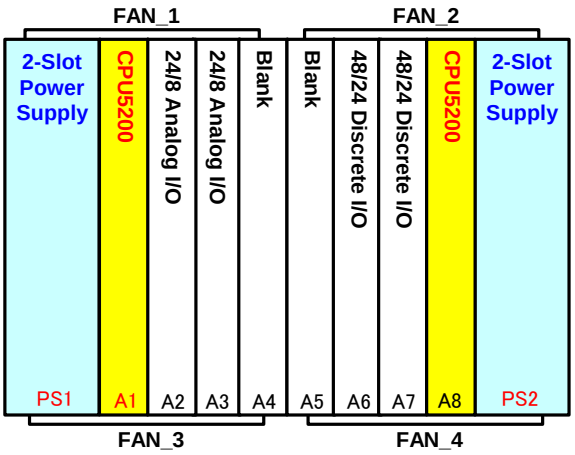

2.2.2—Redundant CPU Theory

The Vertex-Pro control system uses redundant CPU5200 modules that must be located in the first and last VME slots (A1 and A8). The chassis has a single motherboard and houses 2 power-supplies, 2 CPUs, and 6 I/O slots. The CPUs share a single data path to the VME modules and each other.

- The CPU5200 module offers high processing capability in a PowerPC MPC5200 processor with features like dual Ethernet, dual Real Time Network ports, dual CAN, and a configurable RS-232/RS-422/RS-485 serial port. Module operating temperature limits are –40 to +85 °C.

In a redundant system, there are two CPU modules, running the same application program, receiving power from the same pins on the VME backplane, and with access to the I/O modules over the same VME bus. The CPU modules communicate their health to each other over the VME bus, and arbitrate for control of the bus. The CPU which is in slot 1 and in good “health” first, gains control of the I/O modules, and is called the System Controller or SYSCON. The other CPU is then the backup or STANDBY CPU. The SYSCON sends all necessary state information to the backup CPU, allowing it to take control of the I/O modules if the SYSCON fails.

The following conditions will cause a failover from the SYSCON CPU to the backup STANDBY CPU:

- Failure of the on board CPU module power supplies
- Failure of the processor core, including the processor, RAM, flash, oscillator, etc.
- Failure of communications between the processor and the FPGA
- A watchdog timeout between the CPU module and the FPGA. This would mean that one of the devices did not respond to the other device, within a prescribed amount of time.
- A reset of the SYSCON CPU, caused by the front panel or remote Resets
- An application requested failover
- An application stop

2.2.3—Redundant Power Supplies

Two load sharing power supplies provide redundant power to the motherboard, CPU and I/O modules. The MicroNet Plus power supplies are 2-slot wide each and are located at each end of the chassis in the designated PS1 and PS2 slots.

2.2.4—Simplex Inputs and Outputs

Each I/O module has connectors on the faceplate. For analog and discrete I/O, cables connect the module to a Field Terminal module (FTM). The FTM is used to connect to the field wiring. For communications on the CPU, FTMs are not used. Cables are connected directly to the faceplate of the communications on the CPU. The following diagram shows the flow of analog and discrete inputs from the field to the application.

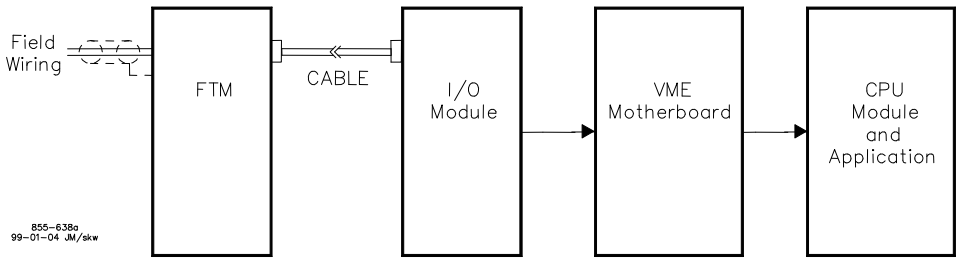

Figure 2-1—Input Flow

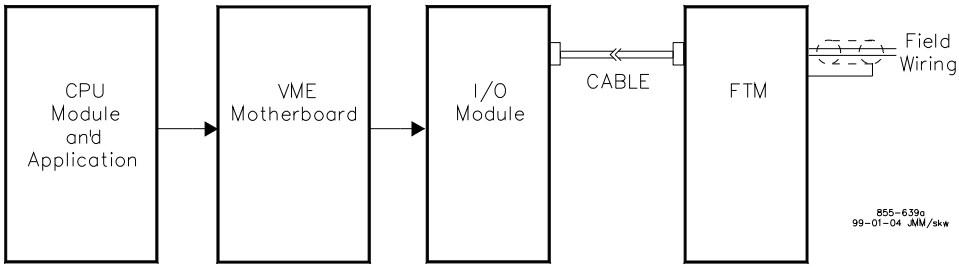

Figure 2-2—Output Flow

2.2.5—Redundant Inputs and Outputs

One level of redundancy is available. This involves wiring two external input devices to two separate input channels. See Figure 2-3. In the event of a failed sensor or a failure in the connection from the sensor to the control, a valid input is still available

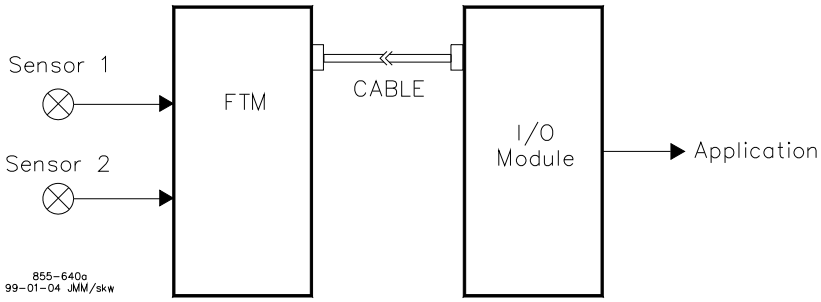

Figure 2-3—Redundant Sensors

The second level is wiring two external input devices to two separate I/O modules. See Figure 2-4. In the event of a failure in one of the sensors, connections, cables, FTMs, or I/ O modules, a valid input is still available.

2.2.6—Redundant Outputs

Redundancy can be added to the outputs as well. Additional external relays can be used to prevent a faulted output from affecting the external device. For discrete outputs, this would require two relays for each output.

The value of redundancy is dependent on the ability of the application to detect the failure. For analog outputs, current and/or voltage readback is provided. For discrete outputs, fault detection requires sensing the relay contact state.

2.3—Vertex-Pro Redundant Operation

To use the MicroNet Plus for redundant operation, a CPU must be in the first VME slot (slot A1) and a CPU must be in the last VME slot (slot A8).

Start-up

- Load and start the application on each CPU using AppManager.
- If the CPUs are started within 20 seconds of each other they will boot in the “Redundant” mode.
- If the CPUs are not started within 20 seconds of each other the first CPU started will become the master and the second CPU will have to re-sync to the running CPU.
- If the applications are not the same and both CPUs are started together, CPU1 (located in slot A1) will be the SYSCON and the backup CPU will be failed.

Normal Operation (Redundant)

- Normally the CPUs will be powered up together and will start running the application within the 20 second window.
- The first CPU to start running the application will remove the WATCHDOG (as indicated by the red LED on the CPU) and become the SYSCON (as indicated by the green LED on the CPU).
- When the second CPU starts running the application the SYSCON control will go to CPU1 (located in slot A1).
- Both CPUs will establish communication and CPU2 will temporarily become SYSCON (as indicated by the green LED on the CPU) to do a diagnostic test to ensure it can drive the VME bus.
- This diagnostic test will switch the SYSCON between both CPU1 and CPU2 three times before proceeding.

After this diagnostics test is completed, the CPUs will determine if the GAP application on both CPUs is the same.

- If they have the EXACT same application CPU1 (located in slot A1) will be SYSCON and initialize the I/O.
- CPU2 will wait at a rendezvous point for the SYSCON CPU to be ready.
- When the SYSCON CPU is ready it will turn out IO_LOCK (as indicated by the LED on the CPU) and start running the GAP application.
- After the SYSCON starts running the real-time code, the CPUs will start sharing data.
- If the SYSCON CPU fails, the Backup CPU will take over running the GAP application and the I/O.

- If the CPUs do not have the same application, CPU1 (located in slot A1) will become the SYSCON and start up in the SIMPLEX mode (see section Only One CPU) with the Backup failed flag set to TRUE. (see picture of CHAS_STAT block)

Single CPU operation (Simplex)

- If only one CPU is started (or the second CPU is started 20 seconds after the first CPU) this CPU will start up in the SIMPLEX mode.
- When this occurs the CPU (in A1 or A14) will remove the WATCHDOG then wait 20 seconds for the second CPU then continue with normal SYSCON start-up of initializing the I/O and running the real-time application.
- When the 2nd CPU is started, it will determine the other CPU is running and ask the SYSCON to allow it to sync-in.
- The SYSCON CPU will communicate with the BACKUP and if the BACKUP has the EXACT same application and is functioning properly, the SYSCON will allow the BACKUP CPU to sync.
- If the BACKUP syncs in correctly, the backup fault indication in the GAP will go FALSE (see Figure 2-7).

2.4—Vertex-Pro Simplex

2.4.1 System Diagram

Vertex-Pro Simplex

- MicroNet 8 VME Slot Chassis
- Single CPU for simplex operation
- Motorola PowerPC CPU5200
- Simplex I/O modules
- Simplex Power
- Redundant smart fans

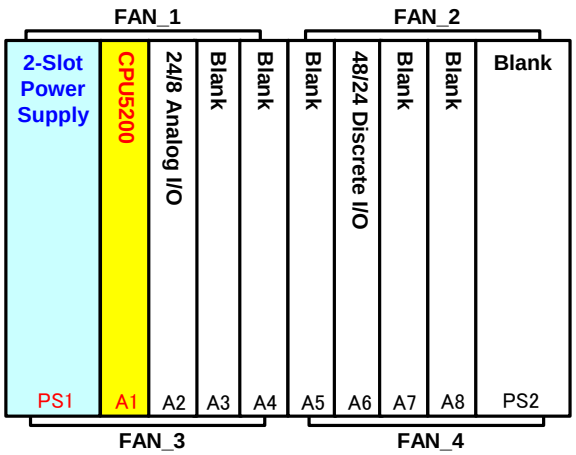

2.4.2—Simplex Power Supplies

Single power supply provides power to the motherboard, CPU and I/O modules. The MicroNet Plus power supply is 2-slot wide and are located at left end of the chassis in the designated PS1 slot.

2.4.3—Single CPU Options

The MicroNet Plus control system may be used in simplex mode with a single CPU5200 module that must be located in slot A1 of the main chassis. No other options are available.

- The CPU5200 module offers high processing capability in a PowerPC 5200 processor with features like dual Ethernet, dual Real Time Network ports, dual CAN, and a configurable RS-232/RS-422/RS-485 serial port. Module operating temperature limits are –40 to +85 °C.

2.4.4—Simplex Inputs and Outputs

Each I/O module has connectors on the faceplate. For analog and discrete I/O, cables connect the module to a Field Terminal module (FTM). The FTM is used to connect to the field wiring. For communications on the CPU, FTMs are not used. Cables are connected directly to the faceplate of the communications on the CPU. The following diagram shows the flow of analog and discrete inputs from the field to the application.

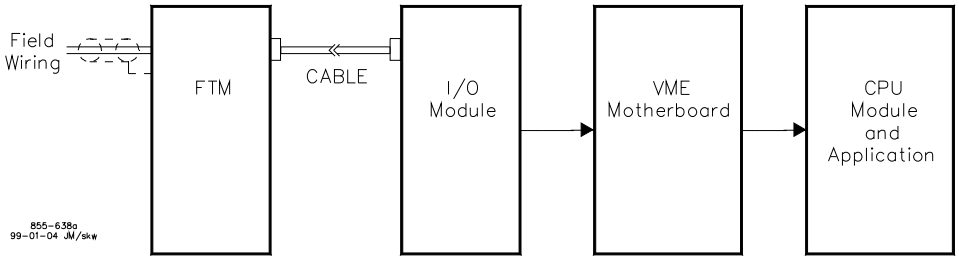

Figure 2-4—Input Flow

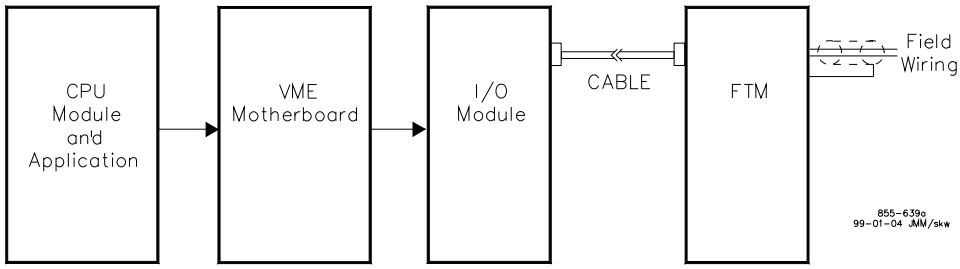

Figure 2-5—Output Flow

2.4.5—Redundant Inputs

One level of redundancy is available. This involves wiring two external input devices to two separate input channels. See Figure 2-7. In the event of a failed sensor or a failure in the connection from the sensor to the control, a valid input is still available

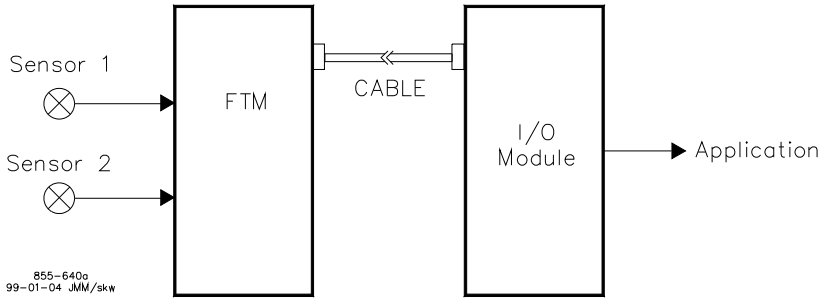

Figure 2-6—Redundant Sensors

The second level is wiring two external input devices to two separate I/O modules. See Figure 2-8. In the event of a failure in one of the sensors, connections, cables, FTMs, or I/ O modules, a valid input is still available.

2.5—Vertex-Pro Simplex Operation

To use the MicroNet Plus for simplex operation, the CPU must be in the first user slot (slot A1).

- In the GAP application, select the MICRONET8 chassis and use the CPU5200 in slot A1.
- The CPU can only be the CPU5200.
- Assign communication and I/O modules according to your application needs.
- Compile and code your application using the Woodward GAP/Coder tools.
- Use the AppManager Service Tool to load and start the application over Ethernet.
- After starting the application, the CPU will initialize the I/O and run the real-time application.
- System initialization is complete when all the I/O module fault LED's are cleared.

2.6—Module Replacement

Chapter 9 contains Installation and Replacement procedures for VME Modules, power supplies, relay boxes, and other devices. Individual CPU and I/O module sections in Chapters 5 through 7 are an additional reference for installation and replacement information.

Sections 4.2 contain additional details for power supply installation and replacement. Note that power must be removed from the power supply input before a module is removed or inserted.

NOTICE

RESET MODULE BEFORE REMOVAL

Live insertion and removal of the CPU5200 is allowed in a MicroNet Plus chassis. These modules should be reset immediately before removing them from the chassis. This notifies the module that it will be removed and provides a graceful failover to another healthy CPU module if available.

2.7—Latent Fault Detection

Because a redundant system can tolerate some single faults, it is possible for a fault to go undetected. Undetected faults are termed latent faults. If another fault occurs when a latent fault exists, the second fault could cause a shutdown. It is important to detect a latent fault in a redundant system so that it may be repaired before another fault occurs. Without a fully triplicated system it is not possible to detect all latent faults, however most faults can be detected. For single or redundant I/O points, fault detection is dependent on the application software to detect its I/O faults.

The Vertex-Pro fault information available from the CHASSIS status block.

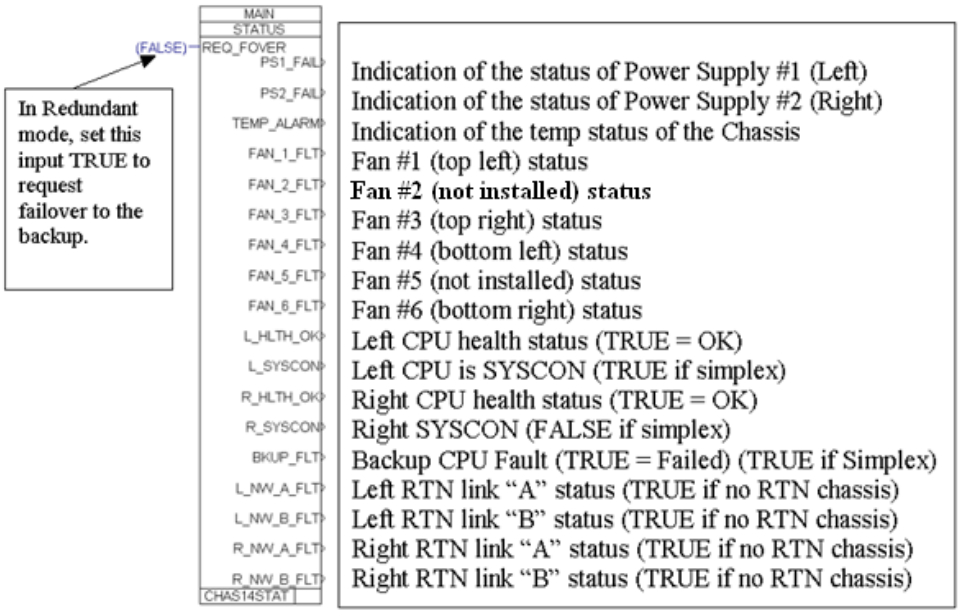

Figure 2-7—CHAS_STAT Block

IMPORTANT	**REQ_FOVER is used when making BACKUP CPU change SYSCON manually. This is effective only within DEBUG mode.**

Chapter 3.
Chassis

3.1—MicroNet Plus 8-Slot Chassis

Figure 3-1—MicroNet Plus 8-Slot I/O Chassis

The MicroNet Plus 8-slot chassis offers redundant CPU capability and more I/O slots, as well as improvements in airflow and overall system reliability.

Features:

- A total of 8 CPU and I/O slots are available for use
- A new 2-slot wide, redundant, load sharing power supply is used
- Redundant Smart fans are used for early notification of fan-failure
- Chassis temperature switches are built into the motherboard and trip at +65 °C
- Redundant, hot-swappable CPUs are supported

3.2—Specification

The MicroNet is designed around a modular 6-slot chassis (block). Each block consists of a premolded cage with a fan for cooling and a temperature switch for high temperature detection. The chassis are cooled by forced air, and either a module or a module blank must be installed in every slot to maintain correct air flow. The fans run whenever power is applied to the system.

The MicroNet Plus 8-slot chassis is composed of two blocks with a motherboard inserted in the back of the assembly to make connections between the fans, switches, power supplies, and control modules. See Figure 4-6. The modules use the VERSA module Eurocard (VME) bus standard for connector specification and data transfer. Slot-to-slot logic and power connections are made through an etched-circuit motherboard. I/O connections are made through cables from the front of the boards to terminal blocks in the cabinet.

From a module connector standpoint, any I/O module can be installed in any of the slots designated for I/O modules. However, when the application software is designed, each module will be assigned to a specific slot and thereafter, the software will expect that specific I/O module to always be in its designated slot.

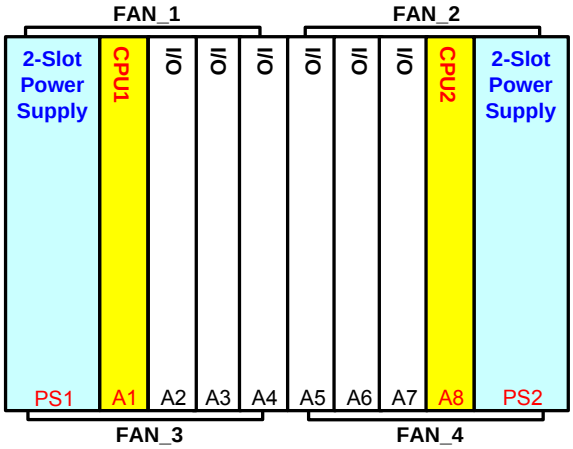

Figure 3-2—MicroNet Plus 8-Slot Chassis

CPU Slots (A1, A8)
Chassis slots A1 and A8 are designated as CPU compatible slots. These slots provide extra functionality for monitoring fan status, chassis temperature status, and power supply status information. The CPU slots also support operation of Redundant CPU's and the associated CPU Failover functions. The CPU slots are identical except for slot address, thus a CPU can be installed in either one to control the MicroNet system.

- For simplex systems, CPU slot A8 can also be used as an I/O module slot.
- Live Insertion and removal is supported for field reparability.
- CPUs are located under different fan sets to improve reliability, airflow, and temperature performance.
- CPU slots use VME-64 connectors on the CPU module slots for improved CPU HotSwap capabilities.

Power Supply Slots (PS1, PS2)
A smaller 2-slot wide power supply has been designed for the MicroNet Plus chassis, thus allowing (2) more slots for I/O. Each power supply is located under different fan sets for improved reliability. The redundant smart fans are located above and below each power-supply for improved airflow. Each power supply provides input failure (AC_FAIL) and output failure (PWR_ALM) fault information to the CPU slots.

- Power supplies are located under different fan sets to improve reliability, airflow, and temperature performance.
- Three different 2-slot wide power supplies are available for use: a low voltage (24 Vdc input), a high voltage (120 Vac/dc input), and a high voltage 220 Vac input version. Refer to the power-supply section for additional information.

Redundant Smart Fans
Each smart-fan provides a tachometer output to the CPU slots. The CPU monitors the fans for slow operation or fan-failure. A GAP application fault is provided for each fan. Quick-connect FAN connectors are utilized for improved field replacement. The motherboard provides individual, short-circuit protected, +24 V Fan power to each fan.

Motherboard Terminal Block (TB1)
The MicroNet Plus chassis includes a terminal block that provides CPU1 and CPU2 Remote reset inputs. The same terminal block provides access to +24 Vdc motherboard power (3 terminals) through two separate 5 A fuses. If a direct short of this power output occurs, the fuses will blow to protect the motherboard, and the power supplies will shut down with a 24 Vdc power fault. Replacement fuses can be ordered as Woodward P/N 1641-1004. The system must be shut down to replace the fuses safely.

24 Vdc Motherboard Power
- **Redundant systems**—Not recommended for use.
- **Simplex systems**—This power may be used for local Ethernet switch power upon successful EMC testing. Consider carefully the possibility of shorts and the type of connector wiring used.

NOTICE

The Motherboard +24 Vdc power outputs should be used locally in the same MicroNet cabinet only in rare instances, as the quality of this supply is critical to proper system operation.

CPU Remote Reset Inputs (RST1, RST2)
Each CPU may be reset by either using the front-panel reset button or a remote-reset input provided on the motherboard. The remote-reset inputs are available at the TB1 terminal block located at the bottom center of the chassis. The individual remote resets for each CPU are designated RST1+, RST1– for slot A1 and RST2+, RST2– for slot A8. These inputs are optically isolated on each respective CPU module and require both a 24 V(+) and a common(-) to be wired. A momentary high will cause a CPU-reset.

Chassis Overtemp Alarm
The MicroNet Plus 8-slot chassis provides (2) over-temperature switches on the motherboard. The over-temperature switches will trip at 65°C ± 3°C and communicate this warning to the CPU and GAP application.

Chassis Outline Drawing
The MicroNet Plus 8-slot chassis is physically the same dimensions as the current MicroNet Simplex 6-slot chassis.

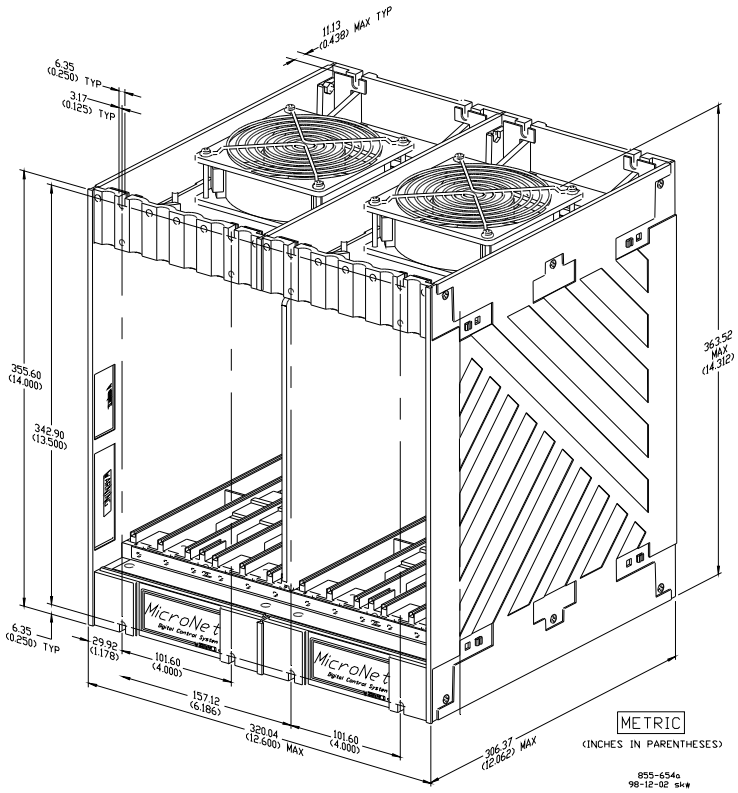

Figure 3-3—Outline Drawing of MicroNet Plus 8-Slot Chassis

3.3—Installation

Figure 4-8 shows the mounting template and fasteners to bulkhead mount the chassis. Rack mounting is not recommended.

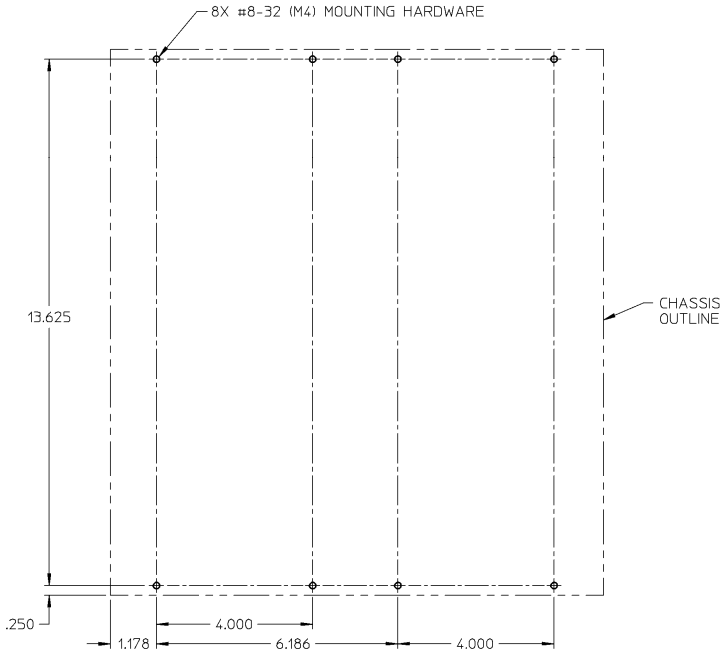

Figure 3-4—Mounting Template of MicroNet Plus 8-Slot I/O Chassis

Chapter 4.
Power Supplies

4.1—Vertex-Pro Chassis Power Supplies

4.1.1—Module Description

The Vertex-Pro Simplex or Redundant controls may use either single or redundant power supplies. Each power supply module produces three regulated outputs: 24 V @ 12 A (max), 5 V @ 32 A (max, derated above 55 degree C external ambient temperature) , and 5 V Precharge @ 3 A (max). A motherboard located on the back of the chassis provides the interconnection of the three outputs from each power supply module into three corresponding power busses: 24 V bus, 5 V bus, and 5 V precharge bus. The 24 V and 5 V busses are load shared between the two power supply modules. The 5 V precharge bus is not load shared. Power output regulation at the motherboard, including line, load, and temperature effects, is less than ±10% for the 24 V bus, +/-5% for the 5 V bus, and +/-10% for the 5 V Precharge bus. The 5 V and 5 V Precharge busses are not for external use. The 24 V bus is accessible from the motherboard for external use (protected by 5 A fuses on the source and return lines).

When redundant power supplies are running, current sharing circuitry balances the load to reduce heat and improve the reliability of the power supplies. In the event that one supply needs to be replaced, the recommended method for changing Power Modules is with the power off (to the module being removed and the module being inserted). The system will tolerate this “cold swap” method without failure.

Each main power supply has four LEDs to indicate power supply health (OK, Input Fault, Overtemperature, and Power Supply Fault). See Vertex-Pro Power Supply Troubleshooting (Section 4.3) for a description of the LED indications.

Input power connections are made to the power supply through a plug/header assembly on the front of the power supply.

For redundant operation, the control can use any combination of power supplies.

The power supplies can only be installed into slots PS1 (power supply #1) and PS2 (power supply #2). If redundant power supplies are not needed, blanking plates must be installed in the slots not being used.

For Vertex-Pro installation instructions, see Section 4.2 (Installation).

NOTICE

The MicroNet Plus main power supplies must have the input power removed before installing or removing.

This equipment is suitable for use in Class I, Division 2, Groups A, B, C, and D or non-hazardous locations only.

Wiring must be in accordance with Class I, Division 2 wiring methods and in accordance with the authority having jurisdiction.

Figure 4-1—Power Supply Module

4.1.2—Power Supply Module Specifications

IMPORTANT

- **All Temperature ratings specify the System Ambient Temperature as measured at the front of the MicroNet chassis.**
- **The Power Supply operating temperature range is –10 to +65 °C with de-rated 5 Vdc output current above 55 °C. See Power Supply specifications.**
- **For a particular system configuration, use the MicroNet Power Program to calculate the output current requirements (24 V, 5 V) as a function of the Chassis, CPUs, and I/O modules used in the system.**

Main PS (24 Vdc Input)

Operating range:	18 to 36 Vdc
Nominal input voltage rating:	24 Vdc
Maximum input current:	33 A
Maximum input power:	600 W
Input power fuse/breaker rating:	50 A time delay
Maximum output current (24 Vdc):	12.0 A @ 65 °C System Ambient Temp.
Maximum output current (5 Vdc):	22.0 A @ 65 °C, 28 A @ 60 °C, 32 A @ 55 °C
Holdup time:	5 ms @ 24 Vdc

Main PS (110 Vac/dc Input)
AC input

Operating range:	88 to 132 Vac (47 to 63 Hz)
Nominal input voltage rating:	98 to 120 Vac, as on power supply label
Maximum input current:	13.6 A
Maximum input power:	1250 VA
Input power fuse/breaker rating:	20 A time delay
Maximum output current (24 Vdc):	12.0 A @ 65 °C System Ambient Temp.
Maximum output current (5 Vdc):	28.0 A @ 65 °C, 32 A @ 60 °C
Holdup time:	1 cycle @ 120 Vac

DC input

Operating range:	100 to 150 Vdc
Nominal input voltage rating:	111 to 136 Vdc, as on power supply label
Maximum input current:	6 A
Maximum input power:	600 W
Input power fuse/breaker rating:	10 A time delay
Maximum output current (24 Vdc):	12.0 A @ 65 °C System Ambient Temp.
Maximum output current (5 Vdc):	28.0 A @ 65 °C, 32 A @ 60 °C
Holdup time:	7 ms @ 120 Vdc

Main PS (220 Vac Input)
High Voltage AC

Operating range:	180 to 264 Vac (47 to 63 Hz)
Nominal input voltage rating:	200 to 240 Vac, as on power supply label
Maximum input current:	6.7 A
Maximum input power:	1250 VA
Input power fuse/breaker rating:	10 A time delay
Maximum output current (24 Vdc):	12.0 A @ 65 °C System Ambient Temp.
Maximum output current (5 Vdc):	22.0 A @ 65 °C, 28 A @ 60 °C, 32 A @ 55 °C
Holdup time:	1 cycle @ 220 Vac

4.2—Installation

4.2.1—Input Power Wiring

A ground conductor connected to the chassis is required for safety. The power supply grounding terminal(s) should also be connected to earth to ensure grounding of the power supply printed circuit boards. The grounding conductor must be the same size as the main supply conductors.

IMPORTANT

Note that the control's power supplies are not equipped with input power switches. For this reason, some means of disconnecting input power to each main power supply must be provided for installation and servicing.

A circuit breaker meeting the above requirements or a separate switch with appropriate ratings may be used for this purpose. Label the circuit breaker and locate it in close proximity to the equipment and within easy reach of the operator. To avoid nuisance trips, use only time-delay fuses or circuit breakers.

Branch circuit fuses, circuit breakers, and wiring must meet appropriate codes and authorities having jurisdiction for the specific country (CE, UL, etc). See Table 4-1 for maximum recommended fuse or breaker ratings. Do not connect more than one main power supply to any one fuse or circuit breaker. Use only the wire sizes specified in Table 4-1 which meet local code requirements. Time delay fuses or circuit breakers must be used to prevent nuisance trips.

Power requirements depend on the number and type of modules supplied for each system. For a system with a single I/O chassis, size the input power source according to the rating of the MicroNet Plus power supply to which the source is connected. Do not size the supply mains for the sum of the MicroNet Plus power supply ratings when redundant supplies are used. MicroNet Plus supplies are redundant when installed in the same chassis. Redundant supplies share the load between them equally, but each must provide for full load in the event that one of the units is disabled. Table 4-1 gives the maximum overload protection for supply mains connected to any single or redundant pair of MicroNet Plus main power supplies. It is not recommended that both MicroNet Plus main power supplies of a redundant pair be connected to a single source, since failure of that source would disable the system.

Multiple chassis systems using MicroNet Plus power supplies may have power supplies of the same model, but in different chassis, connected to the same source. In this case, each branch to a chassis must have its own overcurrent protection sized according to Table 4-1, and the power source must be sized for the sum of the branches.

Not all systems will require the full load capability of the MicroNet Plus power supply. If not otherwise indicated on a cabinet system nameplate, either use the MicroNet power supply input ratings for sizing the system's source or consult Woodward for determining the minimum source requirements.

Table 4-1 provides each power supply's holdup time specification, which is the time the supply will continue to operate within specification after its input power is interrupted. This information may be useful in specifying uninterruptible power supply (UPS) systems.

MAXIMUM INPUT VOLTAGE RANGE	MAXIMUM FUSE/ C.B. RATING (Time Delay)	WIRE SIZE ** (AWG/mm²)
18–36 Vdc	50 A	8 / 10 *
100–150 Vdc	10 A	14 / 2.5
88–132 Vac 47–63 Hz	20 A	12 / 4
180–264 Vac 47–63 Hz	10 A	14 / 2.5

* must use wire rated for at least 75 °C for use at 30 °C ambient
** except as noted, wire sizes are rated 60 °C for 30 °C ambient

Table 4-1—MicroNet Plus Power Supply Requirements

When a cabinet is not supplied with the system, input power connections are made through a plug/header assembly on the front of each main power supply. The plug accept wires from 0.5 to 16 mm² (20–6 AWG). For a good connection, the inserted wires should have the insulation stripped back 11-12 mm (0.45 in). Torque to 0.5 to 0.6 N·m (0.37 to 0.44 lb-ft).

A green/yellow wire connection of at least the same size as the supply wire must be used for the PE ground.

4.2.2—System Power-Up

If at any time during this procedure the defined or expected result is not achieved, begin system troubleshooting.

1. Verify that the entire MicroNet Plus control system has been installed.

2. Turn on the power to one power supply and verify that the power supply's green LED is the only power supply LED on.

3. Turn off the power to the first power supply and turn on the power to the second power supply (if a second power supply is present) and verify that the power supply's green LED is the only power supply LED on.

4. Toggle the CPU's RESET switch. The CPU's red Fault and Watchdog LEDs should turn off, and the green RUN LED should go on. At this time, the CPU is performing the self-diagnostic and boot-up processes. When the CPU has completed its diagnostic tests, all red LEDs on the CPU module or I/O modules should be off, and the control will begin running the application program.

4.3—Power Supply Troubleshooting

System diagnostic routines continuously monitor each main power supply for proper operation. If a fault condition is detected, the fault is annunciated. If necessary, use the power supply's front panel LEDs to assist in diagnosing any related problems. If all supply LEDs are off (not illuminated), it is probable that input power is not present, and verification should be made.

4.3.1—Power Supply LED Descriptions

OK LED—This green LED turns on to indicate that the power supply is operating and that no faults are present.

INPUT FAULT LED—This red LED turns on to indicate that the input voltage is either above or below the specified input range. If this LED is on, check the input voltage, and correct the problem. Long-term operation with incorrect input voltages may permanently damage the power supply. Once the input voltage is within the supply's input specifications, this LED will turn off. Refer to the power supply input specifications.

OVERTEMPERATURE LED—This red LED gives an early warning of a thermal shutdown. The LED turns on to indicate that the internal power supply temperature has exceeded approximately 95 °C. If the internal supply temperature rises to approximately 100 °C, the supply may shut down. Because of the many variables involved (ambient temperature, load, thermal conductivity variations), there is no accurate way of predicting the time between the indication of overtemperature (LED illuminated) and power supply shutdown.

If this LED is turned on, verify that the fans in the power supply chassis are turning and free of dust and other obstructions, and that the temperature around the power supply is less than 55 °C. If the power supply is cooled down without delay, it can recover from this situation without shutting down. This LED will turn off once the internal power supply heatsink temperature falls below approximately 90 °C.

POWER SUPPLY FAULT LED—This red LED turns on when one of the supply's three power converters has shut down or one or more of the supply levels is below internally specified levels. If this LED is on, check for a short circuit on external devices connected to the control's power supply. When the short circuit has been removed, the supply will resume normal operation (Note that if the 24 V or 5 V outputs are shorted, these power converters will be latched OFF and can only be cleared by removing the shorted condition and removing the input power for 1 minute (or until the front panel LED's extinguish)). If no short circuit is found, reset the supply by removing input power for one minute. If the power supply is still not functioning after input power has been restored, verify that the supply is properly seated to the motherboard connector. If the supply is properly seated but is not working, then replace the supply.

4.3.2—Power Supply Checks

The following is a troubleshooting guide for checking areas which may present difficulties. If these checks are made prior to contacting Woodward for technical assistance, system problems can be more quickly and accurately assessed.

- Is the input power within the range of the control's power supply input?
- Is the input power free of switching noise or transient spikes?
- Is the power circuit dedicated to the governor only?
- Are the control's supplies indicating that they are OK?
- Are the control's supplies outputting the correct voltage?
- Is the CPU Low Vcc LED ON?

Chapter 5.
CPUs

5.1—PowerPC CPU5200 Module (Motorola)

5.1.1—Module Description

The MicroNet PowerPC CPU Module contains a Motorola MPC5200 processor, 128 Mbyte DDR RAM, 64 MB of flash memory, a Real Time clock, and various communication peripherals. These peripherals include (2) general use Ethernet ports, (2) Real Time Network ports, (1) serial port, (1) one service port, and (2) CAN ports. This module includes an FPGA to provide VMEbus master/slave capability as well as other functions necessary for redundant systems.

The CPU5200 Module can operate in both simplex and redundant modes. Every MicroNet Plus simplex control contains one CPU module located in the first I/O slot of the MicroNet chassis. A redundant configuration will also have a CPU located in the CPU2 location (slot 8 or slot 14 depending on which chassis is used).

This module was designed and rated for –40 to +85 °C operation in the industrial marketplace.

For CPU module installation and replacement instructions, see the instructions for installing and replacing the VME module in Chapter 9, Installation and Replacement Procedure.

NOTICE

RESET MODULE BEFORE REMOVAL

Live insertion and removal of this module is allowed in a MicroNet Plus chassis. This module should be reset immediately before removing it from the chassis. This notifies the module that it will be removed and provides a graceful failover to another healthy CPU module if available.

The CPU module runs the GAP application program. Figure 5-2 is a block diagram of a CPU module. When the power is applied, the CPU module will perform diagnostic tests, before running the application program.

The CPU module contains a battery to power the real time clock when power to the control is off. This battery is not user-replaceable. During normal operation, on-board circuitry keeps the battery charged. Once the battery is fully charged (taking a maximum of three days), the battery will continue to run the clock for a minimum of three months without power to the control. If power is removed from the CPU module for longer than three months, the real time clock may need to be reset. The resolution of the real time clock is 10 milliseconds.

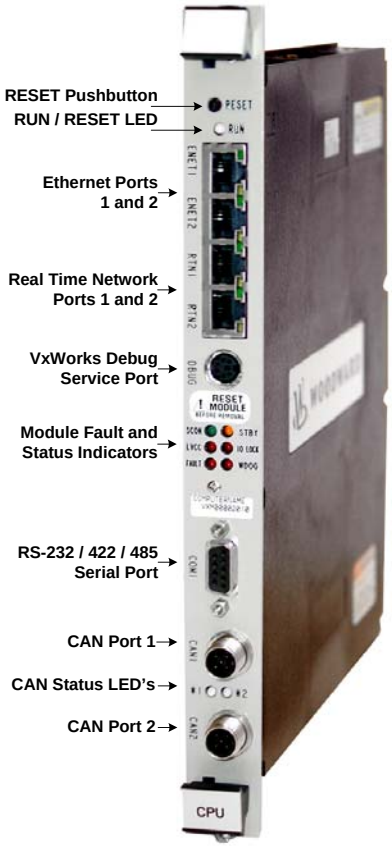

Figure 5-1—CPU Module

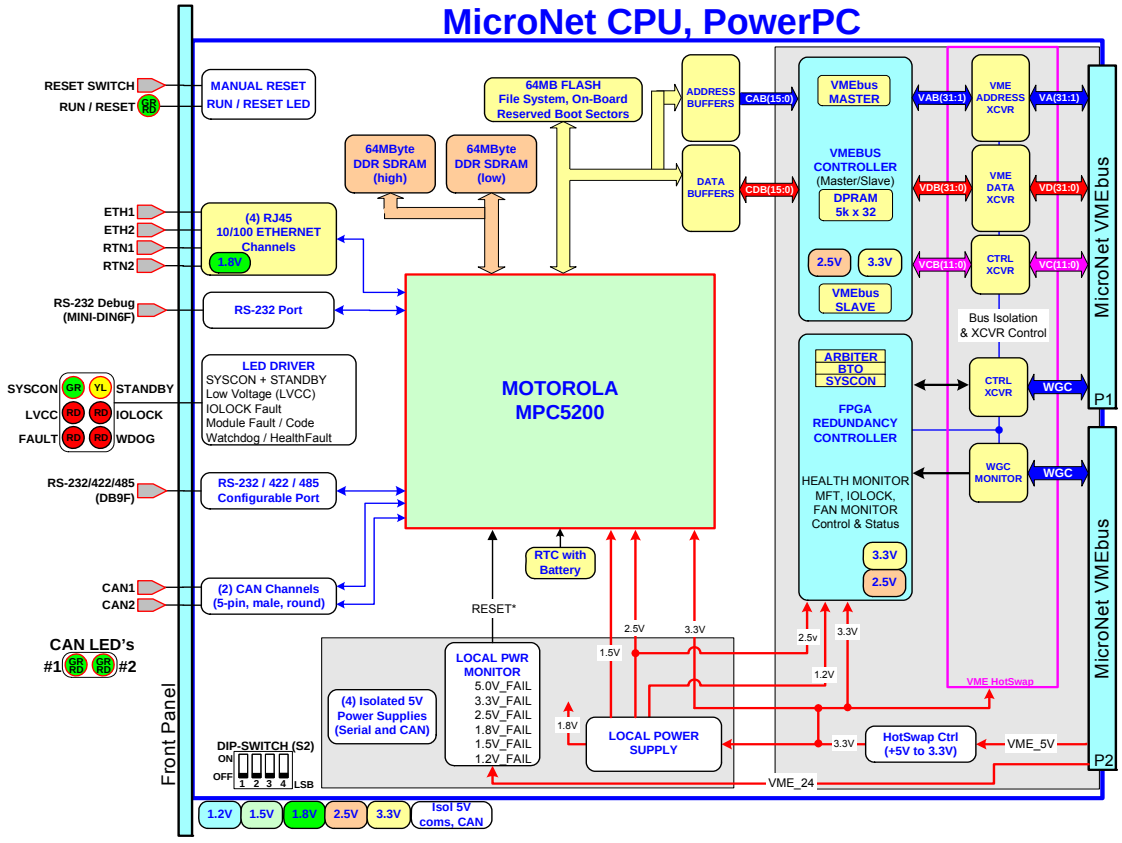

Figure 5-2—CPU Module Block Diagram

5.1.2—Module Configuration

Hardware Configuration. The Module Configuration Switch (S2) must be configured properly for CPU mode (main rack, address 0x000) operation. This module will be factory configured appropriately.

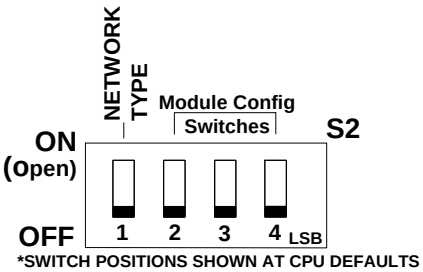

Network Type

Switch	Function
OFF	RTN Network 172.20.x.x
ON	RTN Network 10.250.x.x

Module Config

Addr	Switch	Function
0	000	CPU, MAIN CHASSIS
1	001	RTN, CHASSIS-X1
2	010	RTN, CHASSIS-X2
3	011	RTN, CHASSIS-X3
4	100	RTN, CHASSIS-X4
5	101	RTN, CHASSIS-X5
6	110	RTN, CHASSIS-X6
7	111	RTN, CHASSIS-X7

IMPORTANT

It is recommended to verify proper switch settings before installing the module in the system and when troubleshooting CPU-related issues.

IMPORTANT

If the CPU module is <u>incorrectly</u> configured for RTN mode, Ethernet ports #1 and #2 are NOT active and AppManager will not be available.

- **Network Type.** The Network Type setting is factory set OFF to automatically configure the RTN communication port IP addresses to the 172.20.x.x series.

IMPORTANT

It is recommended to verify proper switch settings before installing the module in the system and when troubleshooting CPU or RTN related issues.

The Network Type setting on all CPU and Remote RTN modules in the system must match for proper system operation.

The customer network attached to Ethernet #1 or #2 may already use the RTN port addresses of 172.20.x.x. In this case, the Network Type switch should be configured ON to use the 10.250.x.x RTN port addresses.

Network Configuration. Ethernet ports (ENET1, ENET2) can be configured for the customer network as desired. The RTN ports (RTN1, RTN2) are reserved for communicating with Woodward Real Time Network devices such as expansion racks. See the on-site Network Administrator to define an appropriate I/P address configuration for ENET1 and ENET2.

IMPORTANT

This module has been factory configured with fixed Ethernet IP addresses of

- **Ethernet #1 (ENET1) = 172.16.100.1, Subnet Mask = 255.255.0.0**
- **Ethernet #2 (ENET2) = 192.168.128.20, Subnet Mask = 255.255.255.0**

Network Configuration Utility (AppManager)
Woodward's *AppManager* software can be used to load Control software (GAP), monitor diagnostic faults, and configure Network settings. The *AppManager* utility can be downloaded from **www.woodward.com/software**. A PC connection must be made to Ethernet #1 (ENET1) using a RJ45 Ethernet cable.

- Locate the ControlName on the module faceplate and highlight it in *AppManager*.
- To VIEW the IP address configuration, select menu option CONTROL - CONTROL INFORMATION. Look for the Ethernet adapter addresses under the Footprint Description.
- To CHANGE the IP address configuration, select menu option CONTROL - CHANGE NETWORK SETTINGS.

5.1.3—Front Panel Indicators (LEDs)

The MicroNet PowerPC CPU5200 module has the following front-panel LEDs.

LED	Name	Description
GR RD RUN	RUN	RUN / RESET (GREEN/RED)—Active RED when the user pushes the reset switch. Active GREEN upon release and after the CPU Operating system is loaded and running.
ETH G LINK	LINK	LINK ACTIVE (GREEN)—A valid Ethernet connection to another device exists
ETH Y TX/RX	TX/RX	TX/RX (YELLOW)—Active YELLOW when data is transmitted or received.
SYSCON GR YL STANDBY LVCC RD RD IOLOCK FAULT RD RD WDOG	SYSCON	System Controller (GREEN)—Active when this CPU or Remote RTN module is the VMEbus System Controller.
	STANDBY	Standby Ready (YELLOW)—Active when the STANDBY mode of this CPU or Remote RTN module is ready to release or take over the System Controller functions in a failover event.
	LVCC	Low VCC Power Fault (RED)—A CPU or VME power supply high or low tolerance fault has been detected. - Local CPU power faults could be 1.2V, 1.5V, 1.8V, 2.5V, or 3.3V. - VME power faults could be VME_5V, VME_5VPC, or VME_24V.
	IOLOCK	IOLOCK (RED)—This LED indicates that an I/O LOCK condition exists either locally on the CPU itself and/or on the VMEbus. **Note:** IOLOCK is a condition driven by the SYSCON where all I/O modules are placed into a failsafe condition and outputs are driven to a known state.
	FAULT	CPU FAULT (RED)—Actively flashes CPU fault codes as necessary.
	WATCHDOG	CPU Watchdog / Health Faults (RED)—The processor watchdog or Health monitor has tripped and the CPU or Remote RTN module is prevented from running. The CPU Watchdog includes a 1 ms failover event and an 18 ms timeout event. Health faults include GAP fault, Watchdog events, and local SYSCLK and MFT hardware faults.
CAN LED's #1 GR RD GR RD #2	CAN #1, #2	CAN #1, #2 (GREEN/RED)—Active GREEN or RED when data is transmitted or received through CAN port #1 or #2.

5.1.4—Module Reset

Front Panel Reset Switch. The CPU module has a pushbutton reset switch on the front panel to reset the module. If a GAP application was successfully running at the time of reset, the same application will be auto-started and re-initialized.

CPU1 and CPU2 Remote Reset. Each CPU module will respond to a +24 V remote reset signal. The chassis provides a terminal-block with inputs RST1+, RST1–, RST2+, and RST2– for wiring the remote reset signals to each CPU. Each reset signal is routed to an opto-isolated input on the appropriate CPU that requires a +24 V signal to cause a reset.

Reset Notes:

- Resetting a CPU or Remote RTN module creates a HealthFault that immediately sets the WDOG light RED.
- Any System running with one healthy CPU. Reset detection will also drive IOLOCK and IORESET to place the Control System, its expansion racks, and all output signals into a known failsafe condition.
- Redundant Systems running with two healthy CPU's. Reset detection on the SYSCON (System Controller) causes an immediate "Failover" to the other STANDBY CPU who then becomes the new System Controller. Reset detection on the STANDBY unit causes a HealthFault that removes it from STANDBY mode.
- The front-panel RUN/RESET led will be RED while reset is held and will turn GREEN for a few seconds after releasing reset. After turning OFF, it will again turn GREEN when the operating system starts to boot.

NOTICE

RESET MODULE BEFORE REMOVAL

This module should be reset immediately before removing it from the chassis. This notifies the module that it will be removed and provides a graceful failover to another healthy CPU module if available.

5.1.5—10/100 BaseT Ethernet Ports

There are two 10/100 BaseT Ethernet Ports (RJ45) available to the application software. These ports are full duplex, auto switching, and do not require the use of an Ethernet shield box.

IMPORTANT

Max cable length is 30 meters. Double shielded, Cat 5 Ethernet cables (SSTP) are required for customer installations.

RJ45 Ethernet Pinout

Connector	Signal Mnemonic
RJ45 female 1 8 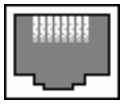	Shielded RJ45 female receptacle
1	TX+
2	TX-
3	RX+
4	---
5	---
6	RX-
7	---
8	---
Shield	Chassis GND

5.1.6—RTN Ports

Two Real Time Network ports (RJ45) are available to provide communications between the main chassis CPU's and any Remote RTN modules located in an expansion chassis. The GAP software application defines the expansion racks, their I/O modules, and the use of these RTN ports (GAP block is RTN).

This option is not used by the Vertex-Pro.

5.1.7—RS-232/422/485 Serial Port

An isolated, configurable RS-232 / 422 / 485 serial port is located on the front of the CPU module and is configured by the GAP software application. The baud rate is selectable from 300 baud to 57.6 Kbaud. Shielded cable is required when connecting to the CPU module's serial port. Using shielded cable will help ensure the robustness of the serial communications.

Pin 1 – RS-422 Transmit (+)
Pin 2 – RS-232 Receive
Pin 3 – RS-232 Transmit
Pin 4 – RS-422 Transmit (-)
Pin 5 – Signal Ground
Pin 6 – Termination Resistor (+)
Pin 7 – RS-485/422 Receive (+)
Pin 8 – RS-485/422 Receive (-)
Pin 9 – Termination Resistor (-)

Figure 5-3—CPU Communications Port (DB9F)

Installation

Termination
For RS-422, termination should be located at the receiver when one or more transmitters are connected to a single receiver. When a single transmitter is connected to one or more receivers, termination should be at the receiver farthest from the transmitter. Figure 5-4 is an example.

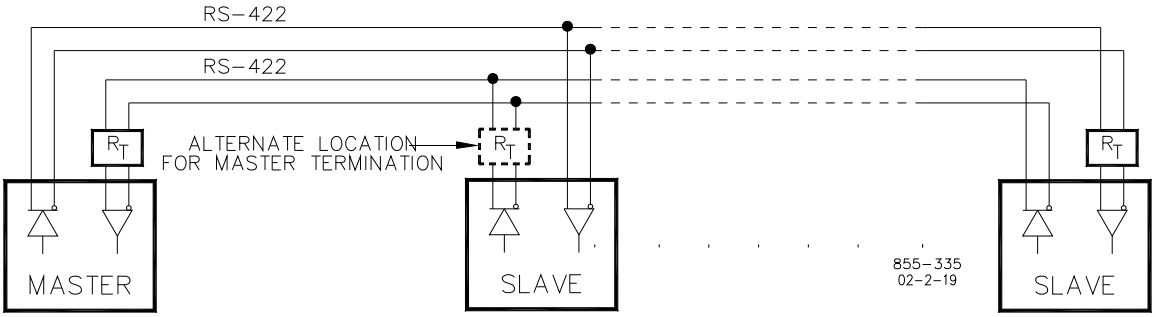

Figure 5-4—RS-422 Terminator Locations

For RS-485, termination should be at each end of the cable. If termination can't be located at the end of a cable, put it as close as possible to the ends. Figure 5-5 is an example.

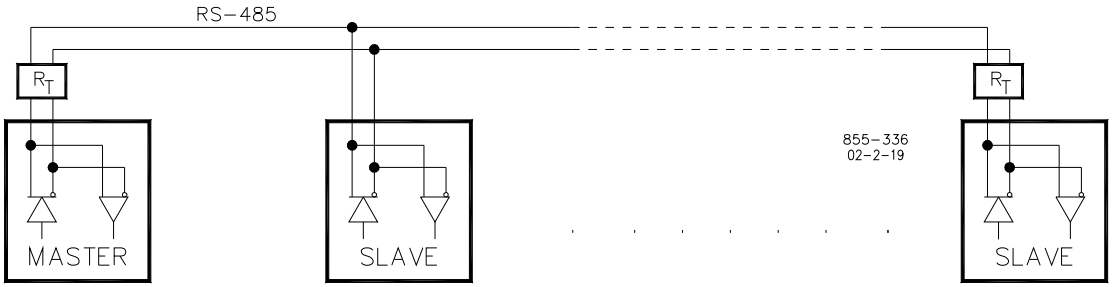

Figure 5-5—RS-485 Terminator Locations

Termination is accomplished using a three-resistor voltage divider between a positive voltage and ground. The impedance of the resistor network should be equal to the characteristic impedance of the cable. This is usually about 100 to 120 Ω. The purpose is to maintain a voltage level between the two differential lines so that the receiver will be in a stable condition. The differential voltage can range between 0.2 and 6 V; the maximum voltage between either receiver input and circuit ground must be less than 10 V. There is one termination resistor network for each port located on the SIO board. Connection to this resistor network is made through the 9-pin connectors on pins 6 and 9. See Figure 5-6 for termination and cable connection examples.

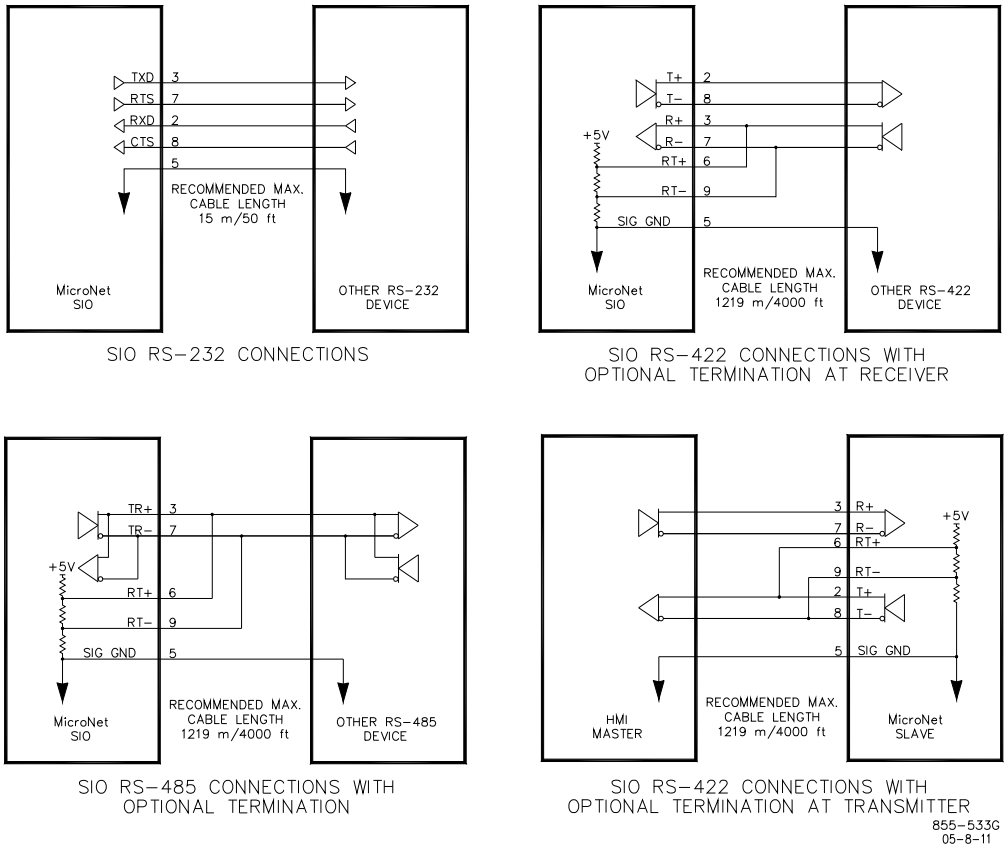

Figure 5-6—Termination and Cable Connection Examples

Grounding and Shielding

The RS-422 and RS-485 specifications state that a ground wire is needed if there is no other ground path between units. The preferred method to do this is to include a separate wire in the cable that connects the circuit grounds together. Connect the shield to earth ground at one point only. The alternate way is to connect all circuit grounds to the shield, and then connect the shield to earth ground at one point only. If the latter method is used, and there are non-isolated nodes on the party line, connect the shield to ground at a non-isolated node, not an isolated node. Figures 5-7 and 5-8 illustrate these cabling approaches.

IMPORTANT

Non-isolated nodes may not have a signal ground available. If a signal ground is not available, use the alternate wiring scheme in Figure 7-24 with the signal ground connection removed on those nodes only.

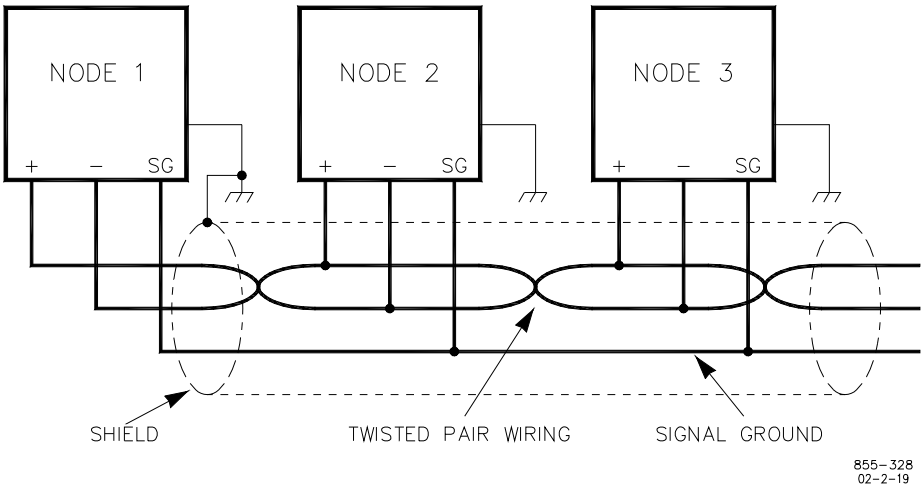

Figure 5-7—Preferred Multipoint Wiring Using Shielded Twisted-Pair Cable with a Separate Signal Ground Wire

IMPORTANT

The SG (signal ground) connection is not required if signal ground is unavailable.

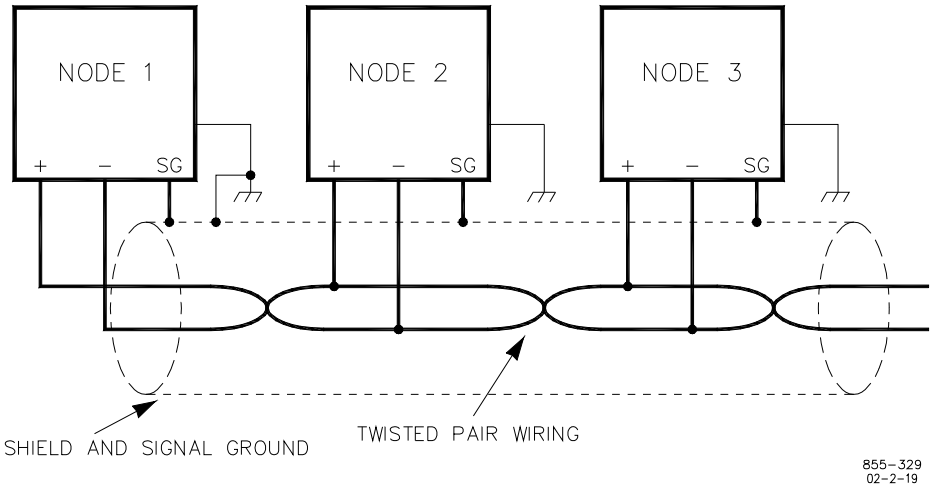

Figure 5-8—Alternate Multipoint Wiring Using Shielded Twisted-Pair Cable without a Separate Signal Ground Wire

5.1.8—RS-232 Service Port

An isolated RS-232 service port is located on the front of the CPU module. This port is for VxWorks® * operating system use only and cannot be configured for application software use. The communication settings are fixed at 38.4 Kbaud, 8 data bits, no parity, 1 stop-bit, and no flow control.

*—VxWorks is a trademark of Wind River Systems, Inc.

For debug use, a null-modem cable and 5450-1065 Serial Adapter cable (PS2M to DB9F) is required to attach this port to a PC. This port is to be used by trained Field Service personnel only!

Shielded cable is required when connecting to the Service Port. Using shielded cable will help ensure the robustness of the serial communications.

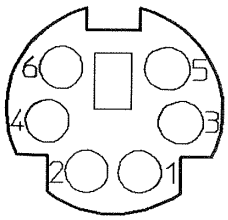

Pin 1 – RS-232 Receive
Pin 2 – RS-232 Transmit
Pin 3 – Signal Ground
Pin 4 – Not Used
Pin 5 – Signal Ground
Pin 6 – Not Used

Figure 5-9—CPU Service Port (mini-DIN6F)

5.1.9—CAN Communication Ports

Two CAN ports (M12 male connectors) are available for communication with other Vertex-Pro controllers. A maximum of three Vertex-Pro configured for operation using compressor load sharing may be used. When using redundant CPU modules and a failover occurs, each CAN port automatically performs a failover from the SYSCON to the STANDBY CPU module.

Note: If CAN or GS6 operation is required in an expansion rack, a CPU module must be used in place of the Remote RTN module.

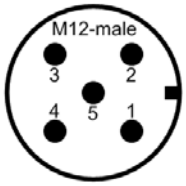

Pin 1 – CAN Shield (AC coupled)
Pin 2 – not used
Pin 3 – CAN Signal Ground (black)
Pin 4 – CAN High (white)
Pin 5 – CAN Low (blue)

Figure 5-10—CAN Communication Ports (M12 male)

CAN networks must include 120 Ω terminations at each end of the trunk line. Drop cables connecting a device to the trunk line should be as short as possible and less than 6 meters. It is recommended to design the network to be less than 100 meters with a max cumulative drop length of less than 39 meters.

Network Speed	*Max Trunk Length (Thick cable)*	*Max Trunk Length (Thin cable)*	*Max Drop Length*	*Max Cumulative Drop Length*
500 Kbps	100 m	100 m	6 m	39 m
250 Kbps	250 m	100 m	6 m	78 m
125 Kbps	500 m	100 m	6 m	156 m

When using load sharing a maximum of three parallel compressor controls can be connected by CAN communication. Redundant CAN communication can be performed by using both CAN #1 and CAN #2 ports on the CPU module. Figure 5-11 is the example of single CAN communication with redundant CPU hardware configuration.

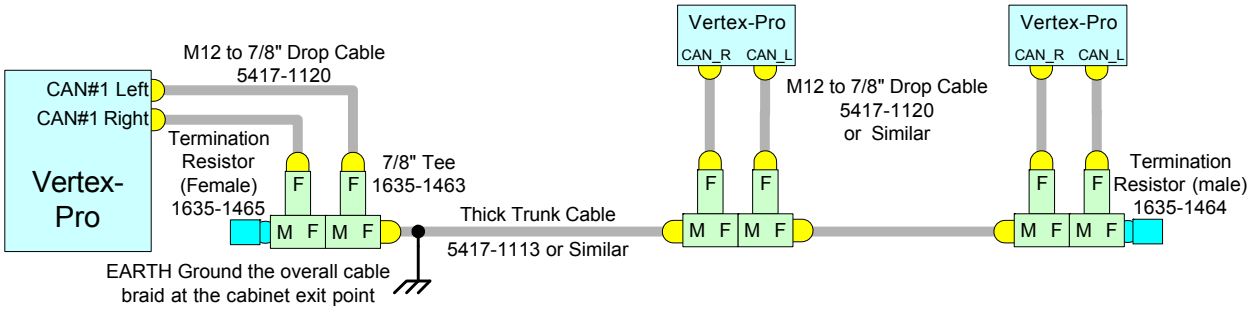

Figure 5-11—CAN Communication Connection Example

5.1.10—CAN Cable Specification

Thick cable is preferred and recommended for all uses. Most CAN / DeviceNet™ (trademark of ODVA, Inc.) cable is not rated for temperatures above 80 °C so be careful during installation to avoid hot routing areas. Always use shielded cables for improved communications in industrial environments.

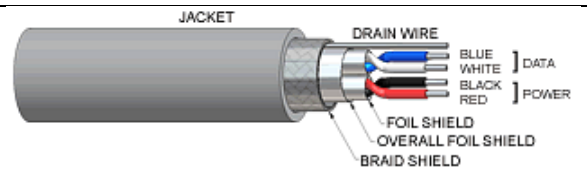

Impedance:	120 Ω ±10% at 1 MHz
DC resistance:	< 7 Ω per 1000 ft.
Cable capacitance:	12 pF/ft at 1 kHz
Propagation delay	1.36 ns/ft (maximum)
Data Pair:	19 strands, 1.0 mm² corresponds to 18 AWG, individually tinned, 3 twists/foot
Power Pair:	19 strands, 1.5 mm² corresponds to 15 AWG, individually tinned, 3 twists/foot
Drain / Shield Wire:	19 strands Tinned Copper shielding braid or shielding braid and foil
Cable type:	twisted pair cable. 2x2 lines
Bend Radius:	20x diameter during installation or 7x diameter fixed position
Signal attenuation:	0.13 dB/100 ft @ 125 kHz (maximum) 0.25 dB/100 ft @ 500 kHz (maximum) 0.40 dB/100 ft @ 1000 kHz (maximum)

Recommended Bulk Cable
Cable manufacturer Turck and Belden are widely available in North America. Turck, Lumberg, and Lapp Cable products are available in Europe. All cables below are suitable for DeviceNet trunk and drop cabling. Be aware that cable vendors may not use the same wire colors on individual conductors.

***Note:** Turck and Lumberg can also provide custom length cordsets with connectors.

Manufacturer	part number	Website
Belden	3082A DeviceNet Thick Cable–Grey	www.belden.com
Belden	3083A DeviceNet Thick Cable–Yellow	www.belden.com
Lapp Cable	2710-250 Unitronic DeviceNet Thick	www.lappcable.com
Lumberg	STL 613	www.lumbergusa.com
Turck	Type 575, DeviceNet Thick Cable – Grey	www.turck.com

5.1.11—Troubleshooting and Tuning

The MicroNet CPU module runs off-line and on-line diagnostics that display troubleshooting messages through the debug Service Port and AppManager. Off-line diagnostics run automatically on power-up and when the Reset switch is asserted. On-line diagnostics run during normal Control System operation when the GAP application is active. More information on diagnostics tests, subsequent LED flash codes, and serial port messages is contained in the VxWorks manual. A table of the CPU fault LED flash codes is shown below:

Failure	Flash Code
RAM Test Failure	1, 4
Real Time Clock Test Failure	2, 2
Floating Point Unit Test Failure	2, 3
Flash Test Failure	2, 4
HD1 Flash Test Failure	2, 5
I2C Bus Test Failure	2, 6
Module Installed in wrong slot	2, 7
Main Chassis CPU switch must be set to 0	3,5
Remote RTN Rate Group 5 Slip	3, 7
Remote RTN Rate Group 10 Slip	3, 8
Remote RTN Rate Group 20 Slip	3, 9
Remote RTN Rate Group 40 Slip	3, 10
Remote RTN Rate Group 80 Slip	3, 11
Remote RTN Rate Group 160 Slip	3, 12
Remote RTN Chassis Switch Invalid	4, 5
Backup Remote RTN Chassis Switch different from Primary Remote RTN	4, 6
This module does not support the CAN port(s)	4, 7

Chapter 6.
Discrete I/O Modules

6.1—Introduction

There are one type of discrete I/O module currently available with the Vertex-Pro. This is the 48/24 Discrete Combo module (48 discrete inputs, 24 discrete outputs) only.

6.2—48/24 Discrete Combo Module

6.2.1—Module Description

A 48/24 Discrete Combo module contains circuitry for forty-eight discrete inputs and twenty-four discrete outputs. These modules have no potentiometers and require no calibration. A module may be replaced with another module of the same part number without any adjustment. There are two different FTM I/O configurations for the 48/24 Discrete Combo Module.

Configuration 1 consists of one 48/24 Discrete FTM connected to the 48/24 Discrete Combo module via two High Density Analog/Discrete cables. The 48/24 Discrete FTM is then connected to either two 16Ch Relay Modules or one 32Ch Relay Module via a Low Density Discrete Cable(s).

Configuration 2 consists of two 24/12 Discrete FTMs (DIN rail mounted) connected to the 48/24 Discrete Combo module via two High Density Analog/Discrete cables.

The discrete inputs are optically isolated and accessible through either the 48/12 Discrete FTM or the 24/12 Discrete FTM depending on the configuration. The discrete outputs are accessible through either the 24/12 Discrete FTM or the two 16Ch Relay Modules or the one 32Ch Relay Module when so configured. See Figures 8-2 and 8-7 for examples of configurations.

Figure 6-1—Discrete Combo Module

6.2.2—Module Specification

Discrete Inputs

Number of channels:	48
Update time:	5 ms
Input type:	Optically isolated discrete input (galvanically isolated)

48/24 Discrete FTM

Input thresholds:	
Low voltage:	8 Vdc at 1.5 mA = “OFF” > 16 Vdc at 3 mA = “ON”
High voltage:	<29 Vdc at 1.8 mA = “OFF” >67 Vdc at 4 mA = “ON”
Input current:	4 mA @ 24 Vdc; 2.6–5 mA @ 125 Vdc
External input voltage:	18–32 Vdc (UL and LVD), or 100–150 Vdc (UL) w/ high Voltage FTM
Isolation voltage:	500 Vdc to earth ground, 1000 Vdc to control common
Time stamping:	1 ms resolution
Isolated 24 Vdc contact supply:	400 mA maximum

Discrete Outputs

Number of channels:	24
Update time:	5 ms

For the 24/12 Discrete FTM specifications, see Chapter 8.

6.2.3—Installation

The modules slide into card guides in the control's chassis and plug into the motherboard. The modules are held in place by two screws, one at the top and one at the bottom of the front panel. Also at the top and bottom of the module are two handles which, when toggled (pushed outward), move the modules out just far enough for the boards to disengage the motherboard connectors.

There are two different FTM I/O configurations for the 48/12 Discrete Combo Module.

Configuration
Configuration consist of two 24/12 Discrete FTMs (DIN rail mounted) connected to the 48/24 Discrete Combo module via two High Density Analog/Discrete cables. See Figure 8-7 for an example of configuration.

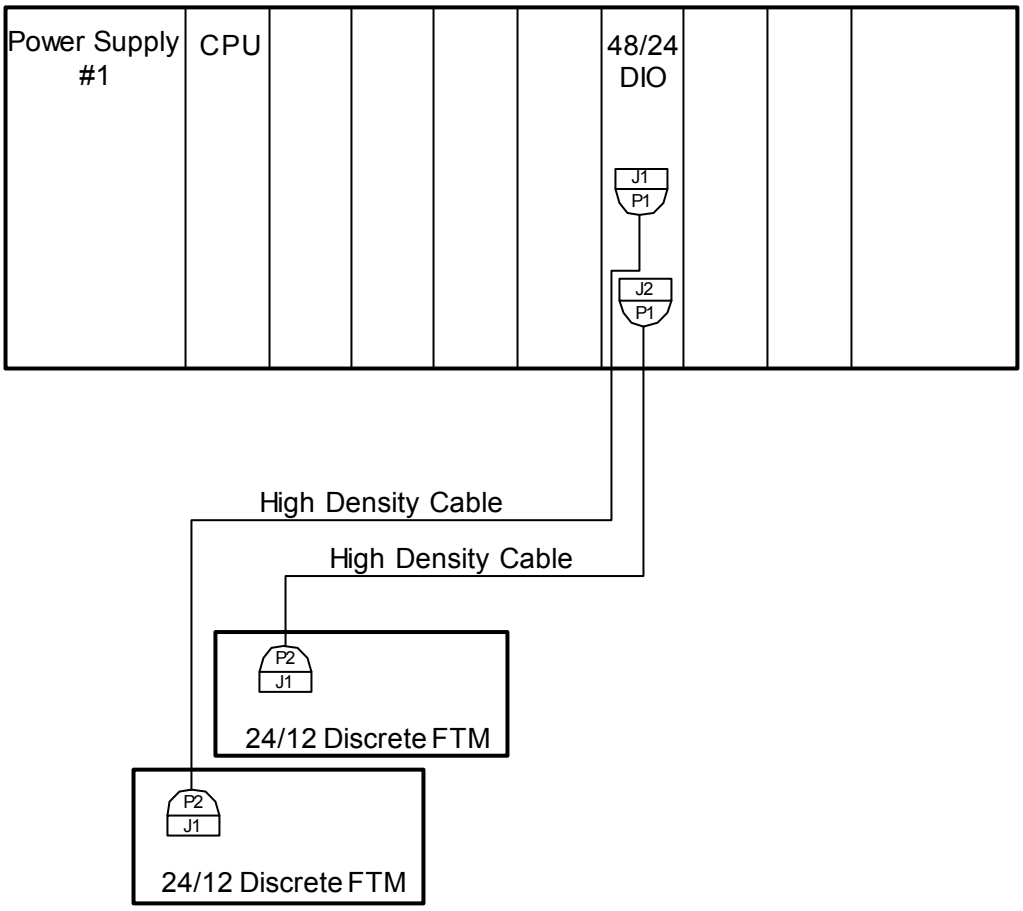

Figure 6-2—Configuration 2, Two 24/12 Discrete FTMs

Both the 48 discrete inputs and 24 discrete outputs are wired to the 24/12 Discrete FTM. An external 24 Vdc source connection to the FTM is required for discrete input contact sensing and relay coil energizing. For wiring information on the 24/12 Discrete FTM, see Chapter 8.

Discrete Inputs

Each 24/12 Discrete FTM accepts 24 contact inputs. The 24/12 Discrete FTM may supply contact wetting voltage. Optionally, an external 18–32 Vdc power source can be used to source the circuit wetting voltage. If the 24 Vdc internal power source is used for contact wetting, a jumper is required between FTM terminals on TB9. If an external power source is used for contact wetting, the external source's common must be connected to the FTM's discrete input common, terminal 49 (see Figure 8-8).

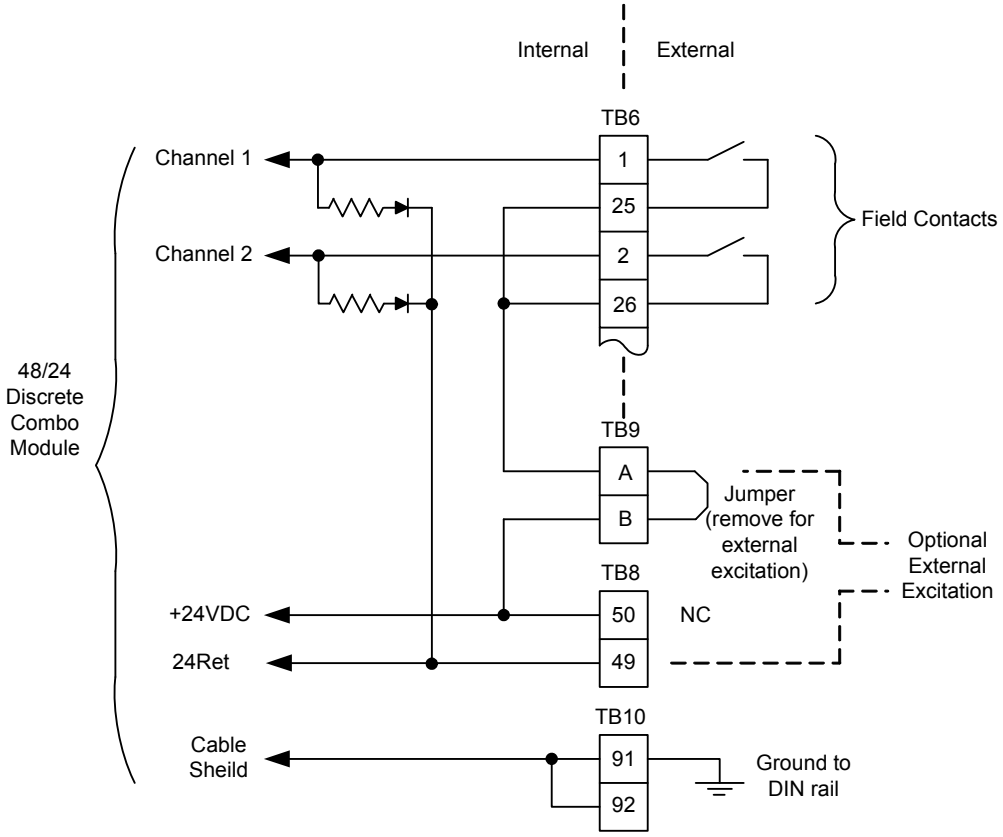

Figure 6-3—Discrete Input Interface Wiring to a 24/12 Discrete FTM

Configuration Notes:

- Refer to Chapter 8 for Discrete Input wiring.
- All contact inputs accept dry contacts.
- If the internal 24 Vdc is used, a jumper must be added to tie the internal 24 Vdc to the bussed power terminal blocks (see Figure 8-8).
- If an external 24 Vdc is used, the common for the external 24 Vdc must be tied to the discrete input common (see Figure 8-8). Power for contacts must be supplied by the control's power supplies, or the external power supply outputs must be rated to Class II at 30 Vdc or less and outputs must be fused with appropriately sized fuses (a maximum current rating of 100/V, where V is the supply's rated voltage, or 5 A, whichever is less).

Discrete Outputs

The discrete outputs on the 48/24 Discrete I/O module are non-isolated; the isolation takes place in the 24/12 Discrete FTM. See Chapter 8 for field wiring of discrete output relays. Figure 8-9 illustrates an example of a discrete output wiring configuration.

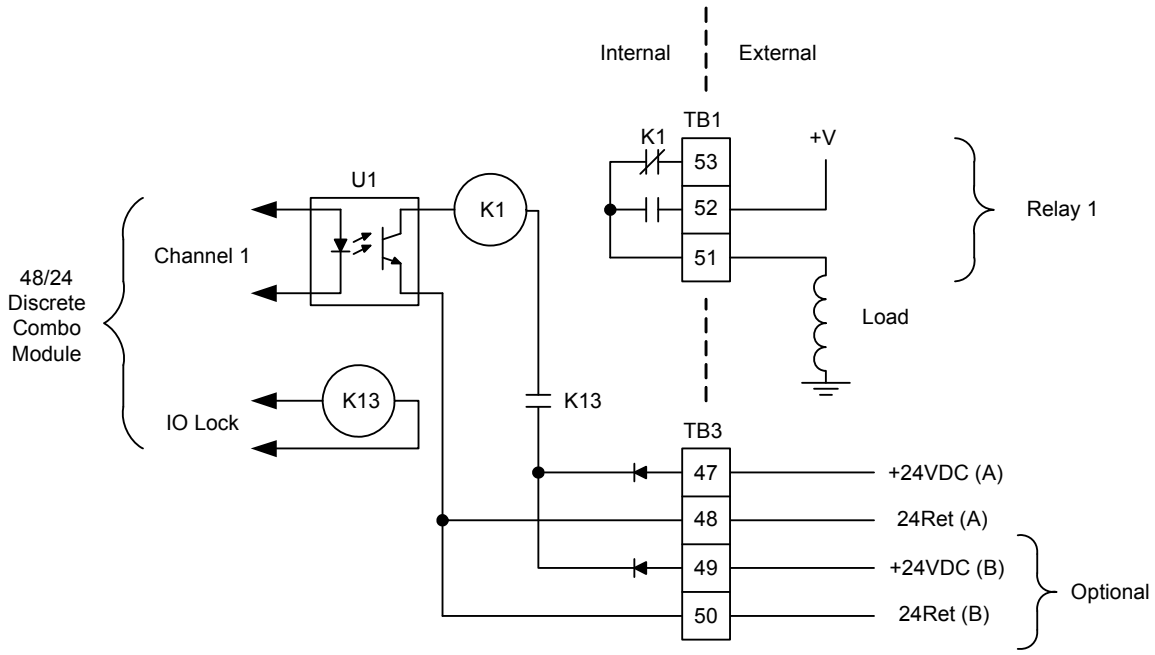

Figure 6-4—Relay Output Interface Wiring to a 24/12 Discrete FTM

Configuration Notes

- Verify that each set of relay contacts meets the power requirements of the circuit with which it is being used. Interposing relays are required when the interfaced circuit demands relay contacts with a higher power rating. If interposing relays or other inductive loads are required, it is recommended that interposing relays with surge (inductive kickback) protection be used. Improper connection could cause serious equipment damage.

6.2.4—FTM Reference

See Chapter 8 for detailed wiring of FTMs. See Appendix A for part number Cross Reference for modules, FTMs, and cables.

6.2.5—Troubleshooting

Fault Detection (Module Hardware)
Each 48/24 Discrete Combo module has a red Fault LED that is turned on when the system is reset. During initialization of a 48/24 Discrete Combo module, which occurs after every CPU reset, the CPU turns the Fault LED on. The CPU then tests each 48/24 Discrete Combo module using diagnostic routines built into the software. If the diagnostic test is not passed, the LED remains on or blinks. If the test is successful, the LED goes off. If the Fault LED on a 48/24 Discrete Combo module is illuminated after the diagnostics and initialization have been run, the module may be faulty or may be located in the wrong slot.

Number of LED Flashes	Failure
2	Micro-controller internal RAM test failure
3	External RAM high and low byte test failure
4	External RAM low byte failure
5	External RAM high byte failure
6	EEPROM failure
7	Software not running
8	System monitor fault
9	MFT pulses missing

Table 6-1—LED Indications of Failure

Fault Detection (I/O)
In addition to detecting 48/24 Discrete I/O module hardware faults, the application software may detect I/O faults.
Discrete Output Faults: The module monitors the FTM control voltage and annunciates faults. The application software determines the course of action in the event of a fault.
Microcontroller Faults: The system monitors a software watchdog, a hardware watchdog, and a software watchdog on the VME bus communications. All outputs are shut down in the event of a microcontroller fault.

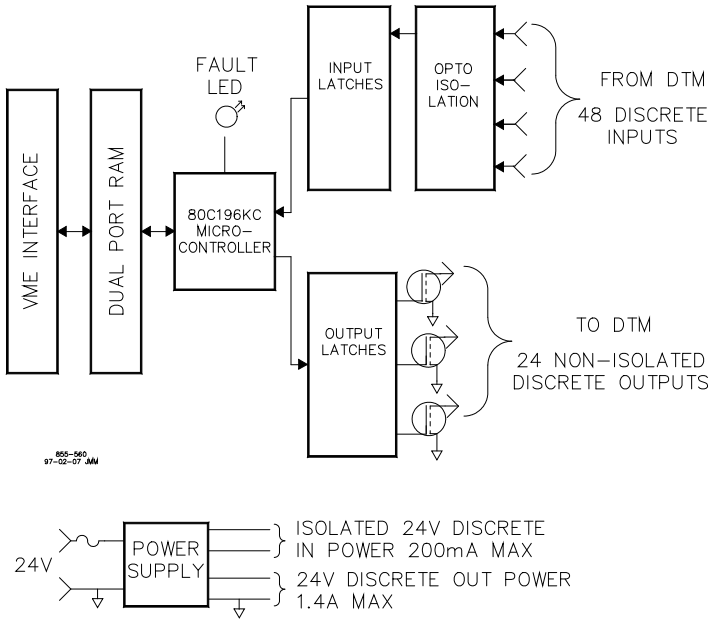

Figure 6-5—48/24 Discrete Combo Module Block Diagram

If during normal control operation all of a chassis' 48/24 Discrete Combo modules have Fault LEDs on, check the chassis' CPU module for a failure. If during normal control operation only the 48/24 Discrete Combo module's Fault LED is on or flashing, insure that it is installed in the correct slot. If it is, then replace that 48/24 Discrete Combo module. When a module fault is detected, its outputs should be disabled or de-energized.

Discrete Inputs

If a discrete input is not functioning properly, verify the following:

1. Measure the input voltage on the terminal block. It should be in the range of 16–32 Vdc for the low voltage FTM or 100–150 Vdc for the high voltage FTM.
2. Check the wiring. If the inputs are reading open, look for a loose connection on the terminal blocks, disconnected or misconnected cables, or a missing jumper on the terminal block.
3. Check the application software configuration to ensure that the input is configured properly.
4. If the other channels on the 48/24 Discrete Combo module are not working either, check the fuse on the 48/24 Discrete Combo module. See the instructions in Chapter 9 for replacing the module. This fuse is visible and can be changed through the bottom of the module. If this fuse is blown, fix the wiring problem and replace the fuse with another fuse of the same type and rating.
5. After verifying all of the above, exchange the J1 and J2 cables. If the problem moves to a different channel, replace the cable. If not, replace the 48/24 Discrete Combo module.
6. If the readings are incorrect on several channels of the 48/24 Discrete Combo module, corresponding to both cables, replace the 48/24 Discrete Combo module.
7. If replacing the module does not fix the problem, replace the FTM. See the instructions in Chapter 9, Installation, for replacing the FTM.

Discrete Outputs

If a discrete output is not functioning properly, verify the following:

1. Check the wiring for a loose connection on the terminal blocks, or disconnected or misconnected cables.
2. Verify that the current through the relay contacts is not greater than the relay contact rating.
3. If the other output channels on the 48/24 Discrete Combo module are not working either, check the fuse on the 48/24 Discrete Combo module. See the instructions in Chapter 9 for replacing the module. This fuse is visible and can be changed through the bottom of the module. If this fuse is blown, fix the wiring problem and replace the fuse with another fuse of the same type and rating.
4. Check the software configuration to ensure that the output is configured properly.
5. After verifying all of the above, exchange the J1 and J2 cables. If the problem moves to a different channel, replace the cable. If not, exchange the cables at the FTM, so J1 is driving J2 and vice versa. If the problem moves to a different relay, replace the 48/24 Discrete Combo module. If the fault stays with the same relay, replace the relay or the relay module. See instructions for replacing the relay modules in Chapter 9. If replacing the relay module does not fix the problem, replace the cable between the relay module and the FTM, or replace the FTM itself. See the instructions in Chapter 9 for replacing the FTM.

Chapter 7.
Analog I/O Modules

7.1—Introduction

This chapter contains information on those modules that are classified as analog I/O modules. There are two types analog I/O modules. There are the single function type modules and the combination modules. The combination modules consist of more than one type of input or output. The single type modules consist of a single type of I/O, such as all 4-20 mA inputs.

7.2—Combination I/O Modules

There are two Analog Combination I/O modules available with the Vertex-Pro. These are described in sections 7.3 and 7.4.

IMPORTANT

The Analog Combo Module is option for the Vertex-Pro. The Vertex-Pro accepts only the following signals in the analog combo module.

- **Three(3) Speed Inputs from MPU or proximity probe**
- **Two(2) Analog Inputs for 4–20 mA**

7.3—24/8 Analog Module

7.3.1—Module Description

A 24/8 Analog module contains circuitry for twenty-four analog inputs and eight 4-20 mA outputs. These modules have no potentiometers and require no calibration. A module may be replaced with another module of the same part number without any adjustment.

The 24/8 Analog Modules come in four different configurations.

1. 24 channels of 4-20 mA inputs with 8 channels of 4-20 mA outputs (2-pole 10 ms filter on all input channels).
2. 24 channels of 4-20 mA inputs with 8 channels of 4-20 mA outputs (2-pole 10 ms filter on all input channels, except channels 23 and 24, which have 2-pole 5 ms filter).
3. 12 channels of 4-20 mA inputs, 12 channels 0-5 Vdc inputs with 8 channels of 4-20 mA outputs (2-pole 10 ms filter on all input channels).

All 4-20 mA analog inputs may be used with two-wire ungrounded (loop powered) transducers or isolated (self-powered) transducers. All analog inputs have 200 Vdc of common mode rejection. If interfacing to a non-isolated device, which may have the potential of reaching over 200 Vdc with respect to the control's common, the use of a loop isolator is recommended to break any return current paths producing erroneous readings.

Each board has an on-board processor for automatic calibration of the I/O channels. Each analog input incorporates a time-stamping feature with 5 ms resolution for two low set points and two high set points.

Figure 7-1—24/8 Analog Module

7.3.2—Module Specification

Analog Input Ratings

Number of channels:	24
Update time:	5 ms
Input range:	0-25 mA or 0-5 V; software and hardware selectable

IMPORTANT **The maximum voltage input range may vary between 4.975 and 5.025 Volts from module to module**.

Isolation:	0 Vrms, 60 dB CMRR, 200 Vdc common mode rejection voltage; no galvanic isolation
Input imp. (4-20 mA):	200 ohms
Anti-aliasing filter:	2 poles at 10 ms
Resolution:	16 bits
Accuracy:	Software calibrated to 0.1%, over 0-25 mA full scale
Temp drift:	275 ppm/C, maximum
Fuse:	100 mA fuse per channel.
Time stamping:	5 ms resolution on low event and latch, and high event and latch

IMPORTANT

The 24 channel analog inputs are divided into two banks, with channel 1 through channel 12 data gathering at 1.8 ms after the MFT tick and channel 13 through channel 24 data gathering at 3.7 ms after the MFT tick.

4–20 mA Output Ratings

Number of channels:	8
Update time:	5 ms
Output Driver:	Pulse Width Modulated (PWM)
PWM frequency:	6.14 kHz
Filter:	3 poles at 500 ms
Current output:	4–20 mA
Current output range:	0-25 mA
Isolation:	0 Vrms
Max load resistance:	600 ohms (load + wire resistance)
Current readback:	8 bits
Readback isolation:	60 dB CMRR, 200 Vdc common mode rejection voltage
Resolution:	11 bits
Accuracy:	Software calibrated to 0.2% of 0-25 mA full scale
Temperature drift:	125 ppm/C, maximum
Readback accuracy:	0.5% of 0-25 mA full scale
Readback temp drift:	400 ppm/C, maximum

7.3.3—Installation

The modules slide into card guides in the control's chassis and plug into the motherboard. The modules are held in place by two screws, one at the top and one at the bottom of the front panel. Also at the top and bottom of the module are two handles which, when toggled (pushed outward), move the modules out just far enough for the boards to disengage the motherboard connectors.

Each 24/8 Analog Module is connected through two High Density Analog/Discrete cables to two 24/8 Analog FTMs. All I/Os on the module are accessible on the FTM, and the channels are labeled to correspond to their software locations (e.g., analog input 1 on the FTM will be analog input 1 in the application software). See Figure 9-2 for an example.

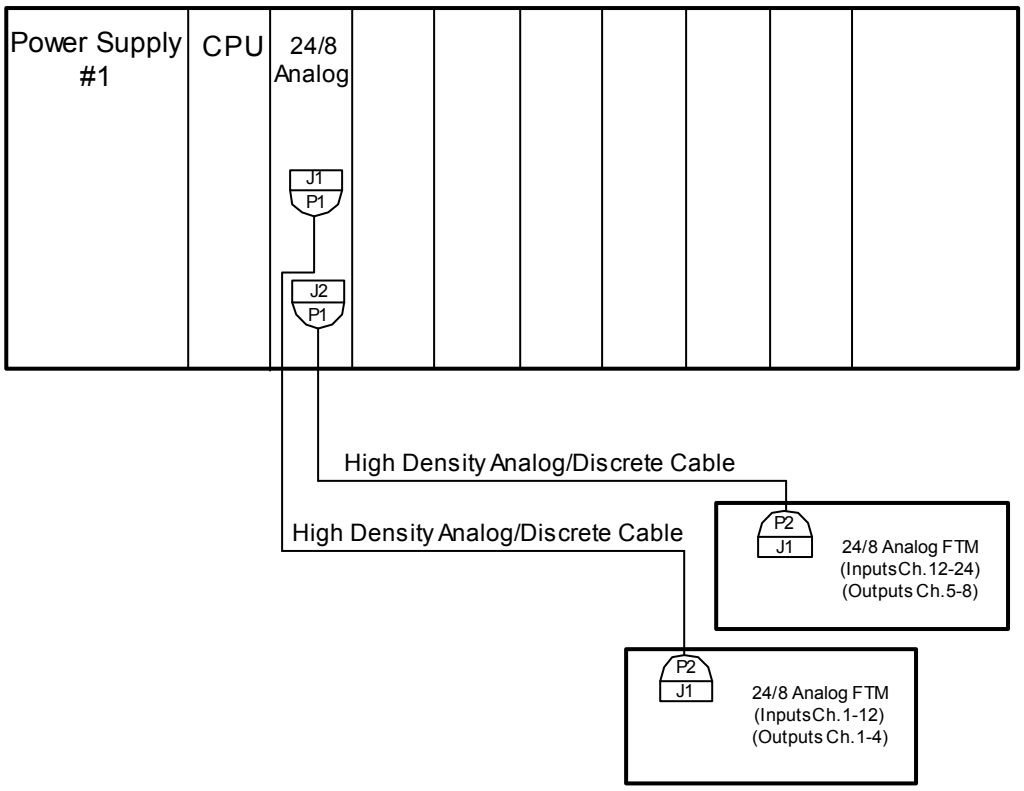

Figure 7-2—Simplex System Configuration Example

Analog Inputs

For a 4–20 mA input signal, the 24/8 Analog Module uses a 200 ohm resistor across the input located on the 24/8 Analog Module. Each analog input channel may power its own 4–20 mA transducer. See Figure 9-3 for analog input connection. This power is protected with a 100 mA fuse on each channel to prevent an inadvertent short from damaging the module. The 24 Vdc outputs are capable of providing 24 Vdc with ±10% regulation. The maximum current is 0.8 A. Power connections can be made through terminals located on the 24/8 Analog FTMs. See Chapter 8 for complete field wiring information for the 24/8 Analog FTM.

IMPORTANT

When configuring the AI Combo block in GAP, set Conf. input field to 1 for all inputs when used with the 24/8 Analog FTM. This will allow the block to use the module factory calibration values for the 4-20 mA inputs that were calibrated with 200 ohm internal resistors on the 24/8 Analog Module.

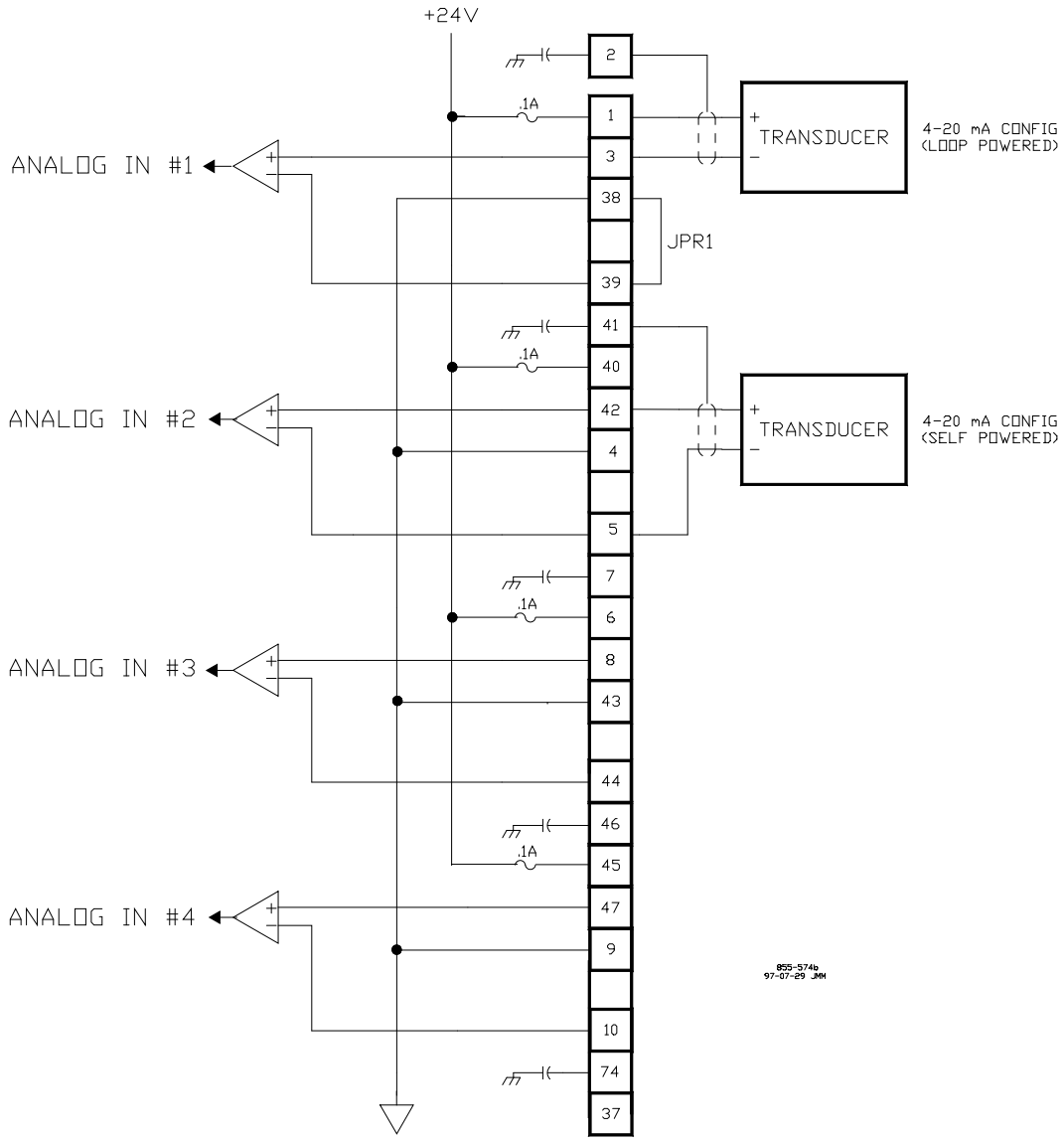

Figure 7-3—Analog Input Wiring for a 24/8 Analog FTM

Analog Outputs

There are 8 analog output channels of 4–20 mA with a full scale range of 0-25 mA. All Analog Outputs can drive a maximum load of 600 ohms (load + wire resistance). See Figure 9-4 for analog output connection. Each output monitors the output source current for fault detection. All of the analog outputs may be individually disabled. When a channel fault or a module fault is detected, the application program may annunciate the fault, disable the channel and stop using data in system calculations or control. Care should be taken to prevent ground loops and other faults when interfacing to non-isolated devices. See Chapter 8 for complete field wiring information for the Analog High Density FTM.

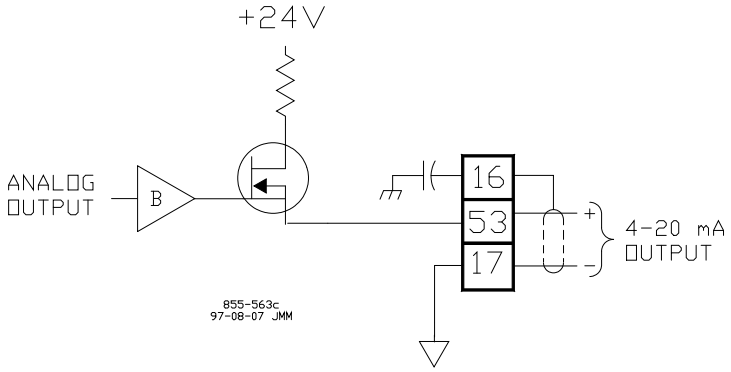

Figure 7-4—Analog Output Wiring for a 24/8 Analog FTM

7.3.4—FTM Reference

See Chapter 8 for complete field wiring information for the Analog High Density FTM. See Appendix A for part number Cross Reference for modules, FTMs, and cables.

7.3.5—Troubleshooting

Each 24/8 Analog module has a red Fault LED that is turned on when the system is reset. During initialization of a module, which occurs after every CPU reset, the CPU turns the Fault LED on. The CPU then tests each module using diagnostic routines built into the software. If the diagnostic test is not passed, the LED remains on or blinks. If the test is successful, the LED goes off. If the Fault LED on a module is illuminated after the diagnostics and initialization have been run, the module may be faulty or may be located in the wrong slot.

Number of LED Flashes	Failure
1	Hardware watchdog, CPU clock failure, reset fail
2	Micro-controller internal RAM test failure
3	External RAM test failure
4	Unexpected exception error
5	Dual Port RAM test failure
6	EEPROM failure
7	Communications watchdog time out
8	EEPROM error is corrected (reset the module to continue)
9	Missing an A/D Converter interrupt

Table 7-1—LED Indications of Failure

Fault Detection (I/O)
In addition to detecting the High Density Analog I/O module hardware faults, the application software may detect I/O faults.

Analog Input Faults: The application software may be set with a high and low latch set point to detect input faults.

Analog Output Driver Faults: The module monitors the source currents and annunciates faults. The application software determines the course of action in the event of a fault.

Microcontroller Faults: The system monitors a software watchdog, a hardware watchdog, and a software watchdog on the VME bus communications. All outputs are shut down in the event of a microcontroller fault.

Troubleshooting Guide

If during normal control operation, all of the 24/8 Analog modules have Fault LEDs on, check the chassis' CPU module for a failure. If during normal control operation only the 24/8 Analog module's Fault LED is on or flashing, insure that it is installed in the correct slot. If it is, then replace that module. See instructions for replacement in Chapter 9, Installation (System Level Installation). When a module fault is detected, its outputs will be disabled or de-energized.

Analog Inputs

If an analog input is not functioning properly, verify the following:

1. Check that the cable is shielded and the shield is properly grounded per the Shields and Grounding section in Chapter 9, Installation (System Level Installation).
2. Measure the input voltage on the FTM terminal block. It should be in the range of 0-5 V.
3. Verify that there are no or minimal AC components to the Analog Input signal. Improper shielding may introduce AC noise on the input terminals.
4. Check the wiring. If the inputs are reading 0 or the engineering units that correspond to 0 mA, look for a loose connection on the terminal blocks, disconnected or misconnected cables, a missing jumper on the terminal block if the input is a current input, or a blown fuse on the 24 Vdc on the FTM.
5. If all of the inputs are reading high, check that the 24 Vdc is not connected across the input directly.
6. Check the software configuration to ensure that the input is configured properly.
7. If all of the channels on the 24/8 Analog module are not working, check the fuse on the 24/8 Analog module. See instructions for module replacement in Chapter 9, Installation (System Level Installation). This fuse is visible and can be changed through the bottom of the module. If the fuse is blown, fix the wiring problem, then replace the fuse with another fuse of the same type and rating.
8. After verifying all of the above, exchange the J1 and J2 cables. If the problem moves to a different channel, replace the cable. If not, replace the module.
9. If the readings are incorrect on several channels of the 24/8 Analog module, corresponding to both cables, replace the module.
10. If replacing the module does not fix the problem, replace the FTM. The FTM contains only traces and a few discrete components, so failure is extremely unlikely. See instructions for replacing the FTM in Chapter 9, Installation (System Level Installation).

Analog Outputs

If an analog output is not functioning properly, verify the following:

1. Check that the cable is shielded and the shield is properly grounded per the Shields and Grounding section in Chapter 9, Installation (System Level Installation).
2. Check the load resistance to ensure that it is not greater than 600 ohms.
3. Check to ensure that the load wiring is isolated.
4. Check the wiring for a loose connection on the FTM terminal blocks and disconnected or misconnected cables.
5. Disconnect the field wiring and connect a resistor across the output. If the output is correct across the resistor, there is a problem with the field wiring.
6. If all of the channels on the 24/8 Analog module are not working, check the fuse on the 24/8 Analog module. See instructions for module replacement in Chapter 9, Installation (System Level Installation). This fuse is visible and can be changed through the bottom of the module. If the fuse is blown, fix the wiring problem, then replace the fuse with another fuse of the same type and rating.
7. Check the software configuration to ensure that the output is configured properly.
8. After verifying all of the above, exchange the J1 and J2 cables. If the problem moves to a different channel, replace the cable. If not, replace the module.
9. If the readings are incorrect on several channels of the module, corresponding to both cables, replace the module.
10. If replacing the module does not fix the problem, replace the FTM. The FTM contains only traces and a few discrete components, so failure is extremely unlikely. See instructions for replacing the FTM in Chapter 9, Installation (System Level Installation).

7.4—Analog Combo Module (Option)

7.4.1—Module Description

Each High Density Analog Combo module contains circuitry for four speed sensor inputs, eight analog inputs, four analog outputs, and two proportional actuator driver outputs. Each speed sensor input may be from a magnetic pick-up or from a proximity probe, each analog input may be 4–20 mA or 0-5 V, and each actuator driver may be configured as 4–20 mA or 20–160 mA.

There are two configurations of the Analog Combo Modules. One has the analog inputs configured for 4-20 mA and the other is configured for 0-5 V. See Appendix A for specific part numbers. In a simplex system, either Analog Combo module is connected through two analog cables to one Analog Combo FTM. All of the I/O are accessible on the FTM, and the channels are labeled to correspond to their software locations, e.g. analog input 1 on the FTM will be analog input 1 in the application software.

This module includes no potentiometers and requires no calibration. An Analog Combo module may be replaced with another module of the same part number without any adjustment.

Figure 7-5—Analog Combo Module

7.4.2—Module Specifications

Digital Speed Sensor Inputs

Number of channels:	4
Update time:	5 ms

MPU Input Ratings

Input frequency:	100 - 25000 Hz
Input amplitude:	1-25 Vrms
Input impedance:	2000 Ohms
Isolation voltage:	500 Vrms
Resolution:	12 bits minimum over chosen frequency range
Accuracy:	0.03% full scale, minimum

Proximity Probe Input Ratings

Input frequency:	0.5 - 25000 Hz
Input amplitude:	3.5 - 32 Vdc input to the module
Available power:	12 Vdc or 24 Vdc, 50 mA maximum
Isolation voltage:	0 Vrms
Resolution:	12 bits minimum over chosen frequency range
Accuracy:	Software calibrated to 0.03% full scale
Fuse:	24 Vdc 100 mA fuse/channel, 12 Vdc short circuit protected
Time Stamping:	5 millisecond resolution on low event and low latch

Analog Input Ratings

Number of channels:	8
Update time:	5 millisecond
Input range:	0-25 mA, or 0-5 V; Dependent on module part number.

IMPORTANT **The maximum input voltage range may vary between 4.975 and 5.025 Volts from module to module.**

Isolation:	0 VRMS, -60 dB CMRR, 200 Vdc common mode rejection voltage; no galvanic isolation
Input impedance:	200 ohms
Anti-aliasing filter:	2 poles at 10 ms
Resolution:	16 bits
Accuracy:	Software calibrated to 0.1%, over 25 mA full scale
Temp drift:	275 ppm/C, maximum
Fuse:	100 mA fuse per channel
Time stamping:	5 ms resolution on low event and latch, and high event and latch

4–20 mA Analog Output Ratings

Number of channels:	4
Update time:	5 ms
Driver:	Pulse Width Modulated (PWM)
PWM frequency:	6.14 kHz
Filter:	3 poles at 500 ms
Current output:	4–20 mA current output range: 0 - 25 mA
Isolation:	0 Vrms
Max load resistance:	600 ohms (load + wire resistance)
Current readback:	11 bits
Readback isolation:	-60 dB CMRR, 200 Vdc common mode
Resolution:	11 bits
Accuracy:	Software calibrated to 0.2%, over 25 mA full scale
Temperature drift:	125 ppm/C, maximum
Readback accuracy:	0.2%, over 25 mA full scale
Readback temp drift:	400 ppm/C, maximum

Actuator Driver Output Ratings

Number of channels:	2
Update time:	5 millisecond
Driver:	PWM (proportional only), single or dual coil
PWM frequency:	6.14 kHz
Filter:	3 poles at 500 microseconds
Current output:	4–20 mA or 20–160 mA, software selectable
Current output range:	0-24 mA or 0-196 mA, depending on the selected range
Isolation:	0 Vrms
Max. act resistance	45 ohms on the 20–160 mA output, 360 ohms on the 4–20 mA output
Readback	Actuator source and return currents
Readback isolation	-60 dB CMRR, 200 Vdc common mode
Dither current	25 Hz, fixed duty cycle, software variable amplitude
Resolution	11 bits over 25 or 200 mA range
Accuracy	Software calibrated to 0.2% of 25 or 200 mA range
Temperature drift	125 ppm/C, maximum
Readback accuracy	0.1% of 25 or 200 mA range
Readback temp drift	150 ppm/C, maximum

7.4.3—Installation

The modules slide into card guides in the control's chassis and plug into the motherboard. The modules are held in place by two screws, one at the top and one at the bottom of the front panel. Also at the top and bottom of the module are two handles which, when toggled (pushed outward), move the modules out just far enough for the boards to disengage the motherboard connectors.

There are two configurations of the Analog Combo Modules. One has the analog inputs configured for 4-20 mA and the other is configured for 0-5 V. See Appendix A for specific part numbers. In a simplex system, each Analog Combo module is connected through two Low Density analog cables to one Analog Combo FTM. All of the I/O are accessible on the FTM, and the channels are labeled to correspond to their software locations. See Figure 9-15 for configuration.

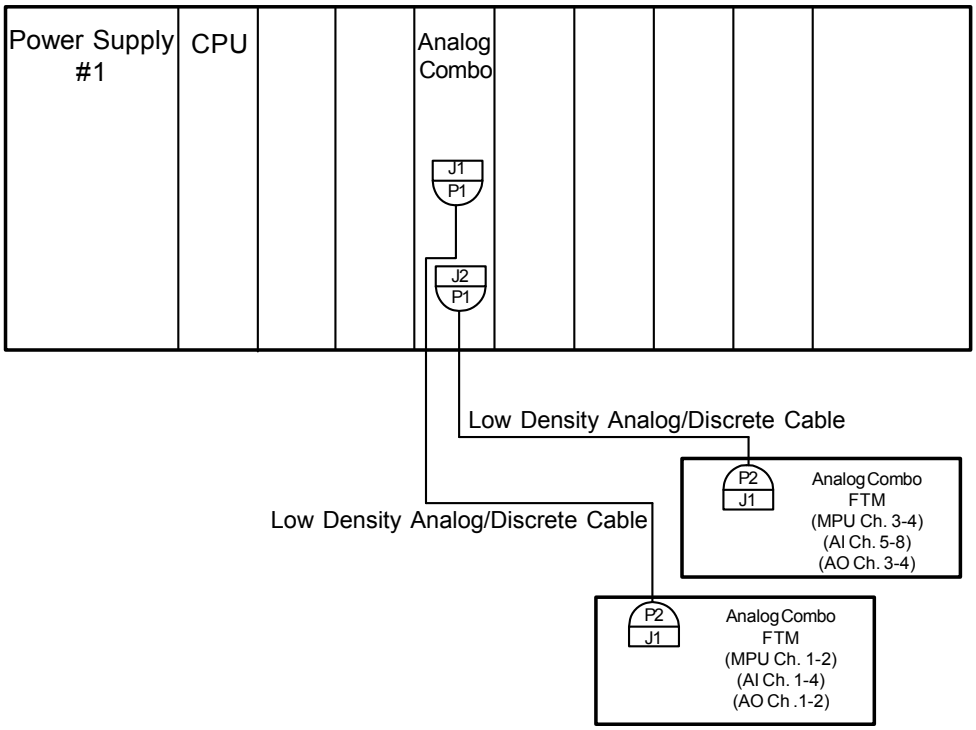

Figure 7-6—Simplex System Configuration Example

Field Wiring

See Chapter 8 for detail wiring connections for the Analog Combo FTM. Wire each channel per the following examples for each type of signal.

Speed Sensor Inputs

The MPU and proximity probe inputs are read and the speed is provided to the application program. A derivative output is provided via the application software if desired. The speed sensor inputs are filtered by the Analog Combo module and the filter time constant is selectable through the application software program at 8 milliseconds or 16 milliseconds. Eight milliseconds should be acceptable for most applications. 16 milliseconds may be necessary for very slow speed applications. The speed range determines the maximum speed that the module will detect. The control output of the software will detect a minimum speed of one fiftieth of the speed range. This allows detection of failed speed sensors to help prevent overspeed due to slow update times at very low speeds. The monitor output of the GAP block will read down to 0.5 Hz, irrespective of the speed range. An application may use any combination of accepted MPU and proximity probes, and any combination of speed ranges.

Any of the module's four speed channels accepts passive magnetic pickup units (MPUs) or proximity probes. Each speed input channel can only accept one MPU or one proximity probe.

IMPORTANT

When a speed sensor input channel has been wired as *either* MPU or proximity probe input, the unused MPU/Prox must be jumpered at the FTM. When an input channel is not used, both the MPU and Prox inputs must be jumpered. See example in Figure 9-16.

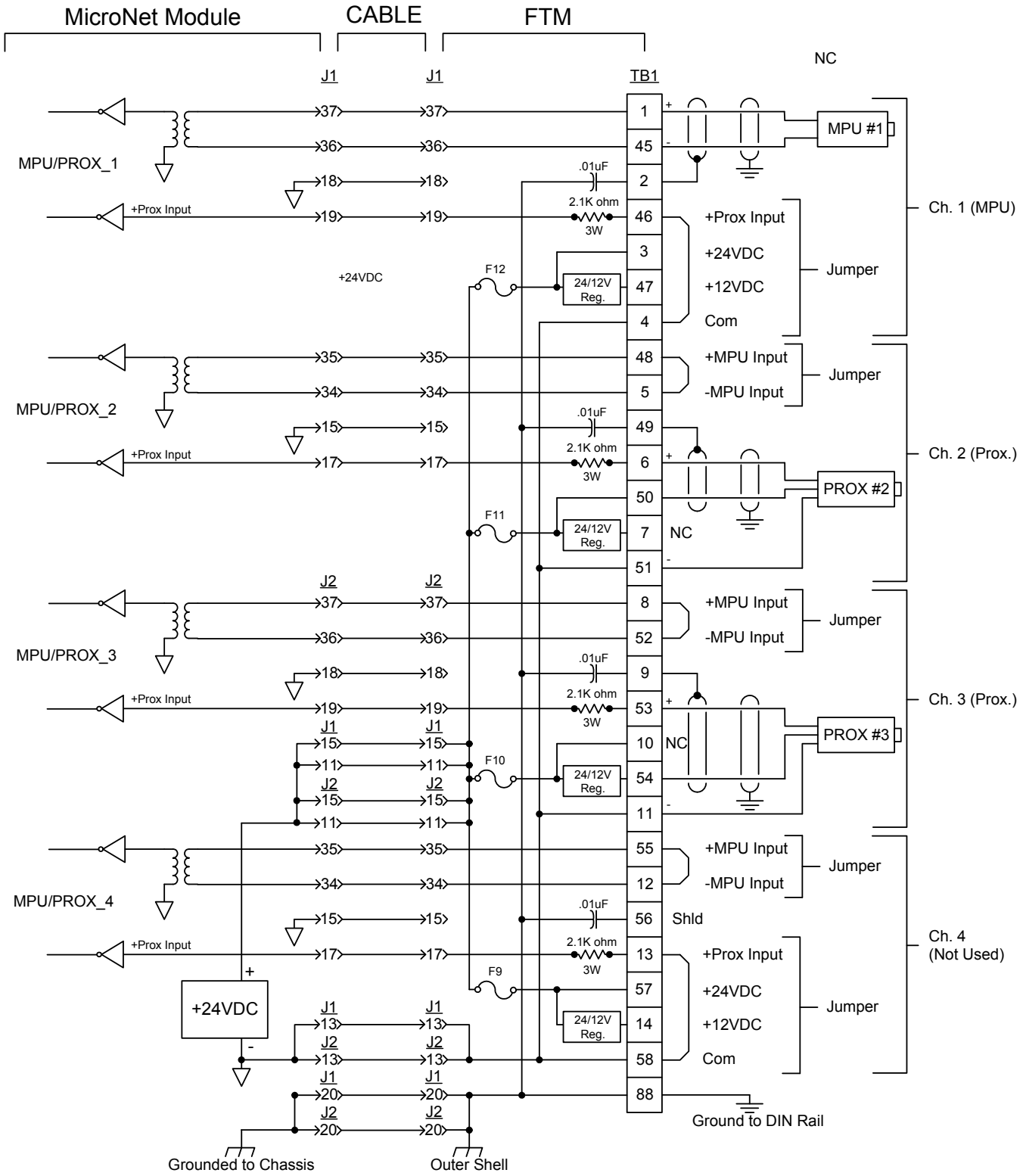

Figure 7-7—MPU/Proximity Interface Wiring to the Analog Combo FTM

A proximity probe may be used to sense very low speeds. With a proximity probe, speed can be sensed down to 0.5 Hz. When interfacing to open collector type proximity probes, a pull-up resistor is required between the supplied proximity probe voltage and the proximity probe input to the FTM. Individually fused 12 Vdc and 24 Vdc sources are provided with each speed input to power system proximity probes (100 mA fuses, located on the FTMs, are used). External pull-up resistors are required when interfacing with an open collector type proximity probe. See Figure 9-16 for MPU/proximity probe wiring example. Channel 1 shows an MPU connection, channel 2 shows a 24 V proximity connection, and channel 3 is an example of a 12 V proximity connection. Always jumper the unused MPU connection to eliminate possible noise interference when connecting a proximity probe.

IMPORTANT

It is not recommended that gears mounted on an auxiliary shaft coupled to the rotor be used to sense speed. Auxiliary shafts tend to turn more slowly than the rotor (reducing speed sensing resolution) and have coupling gear backlash, resulting in less than optimum speed control. For safety purposes, it is also not recommended that the speed sensing device sense speed from a gear coupled to a mechanical drive side of a system's rotor coupling.

Analog Inputs

The analog inputs may be current or voltage type dependent on the part number. See Appendix A for specific part numbers. Both modules use the same cable and FTM.

All current inputs may be used with two-wire ungrounded (loop powered) transducers or isolated (self-powered) transducers. All analog inputs have 200 Vdc of common mode rejection. If interfacing to a non-isolated device, which may have the potential of reaching over 200 Vdc with respect to the control's common, the use of a loop isolator is recommended to break any return current paths that may produce erroneous readings. All current inputs use 200 ohm resistors across their inputs.

Each current input channel may power its own 4–20 mA transducer. This power is protected with a 100 mA fuse on each channel to prevent an inadvertent short from damaging the module. The 24 Vdc outputs are capable of providing 24 Vdc with ±10% regulation. Power connections can be made through terminals located on the FTMs. Refer to Figure 9-17 for 4-20 mA Current Input wiring.

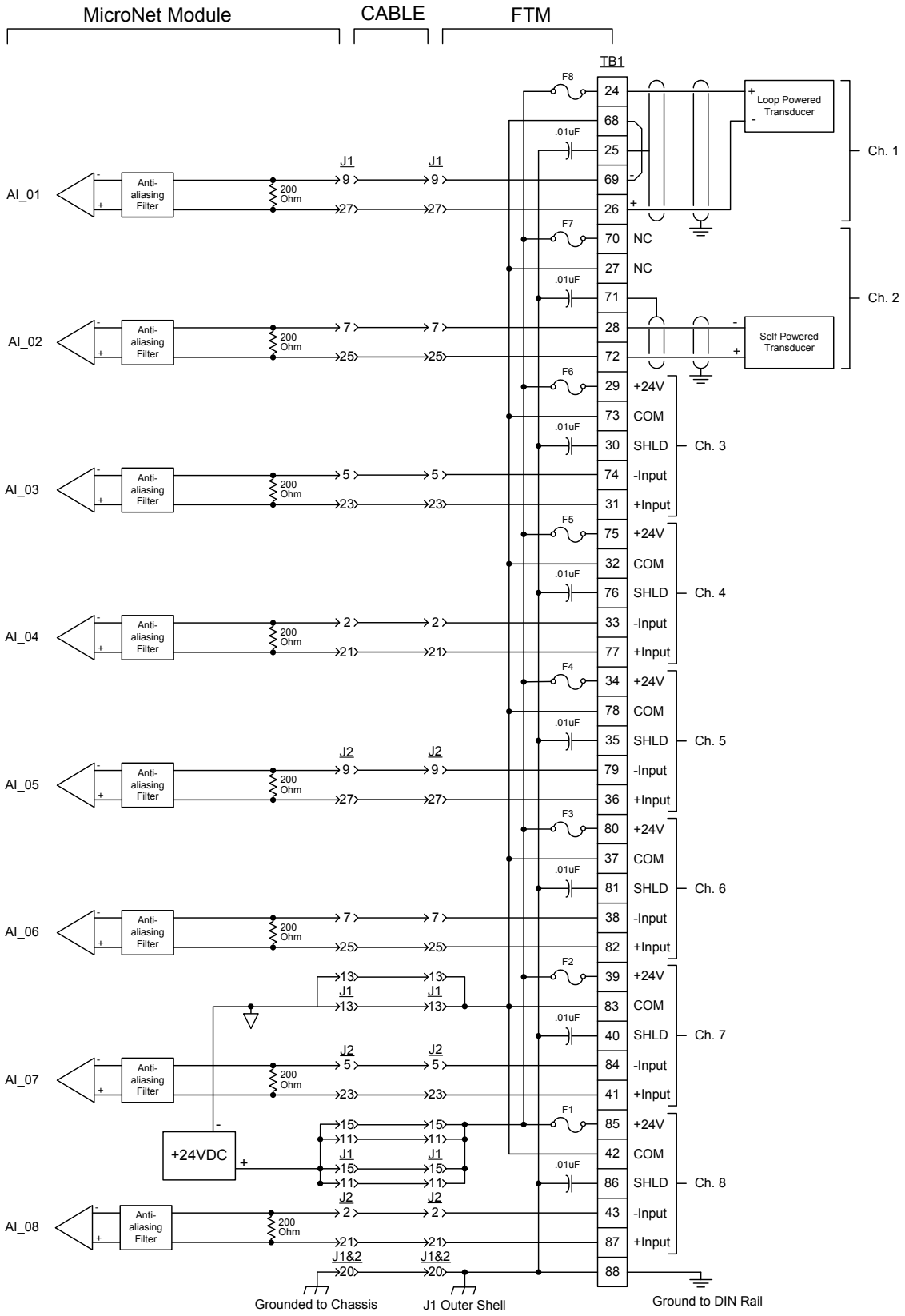

Figure 7-8—Current Input Wiring for an Analog Combo Module FTM

Only self-powered voltage transducers should be used on voltage input channels. The full scale range must not exceed 5 volts. Refer to Figure 9-18 for 0-5 Vdc voltage transducer input wiring.

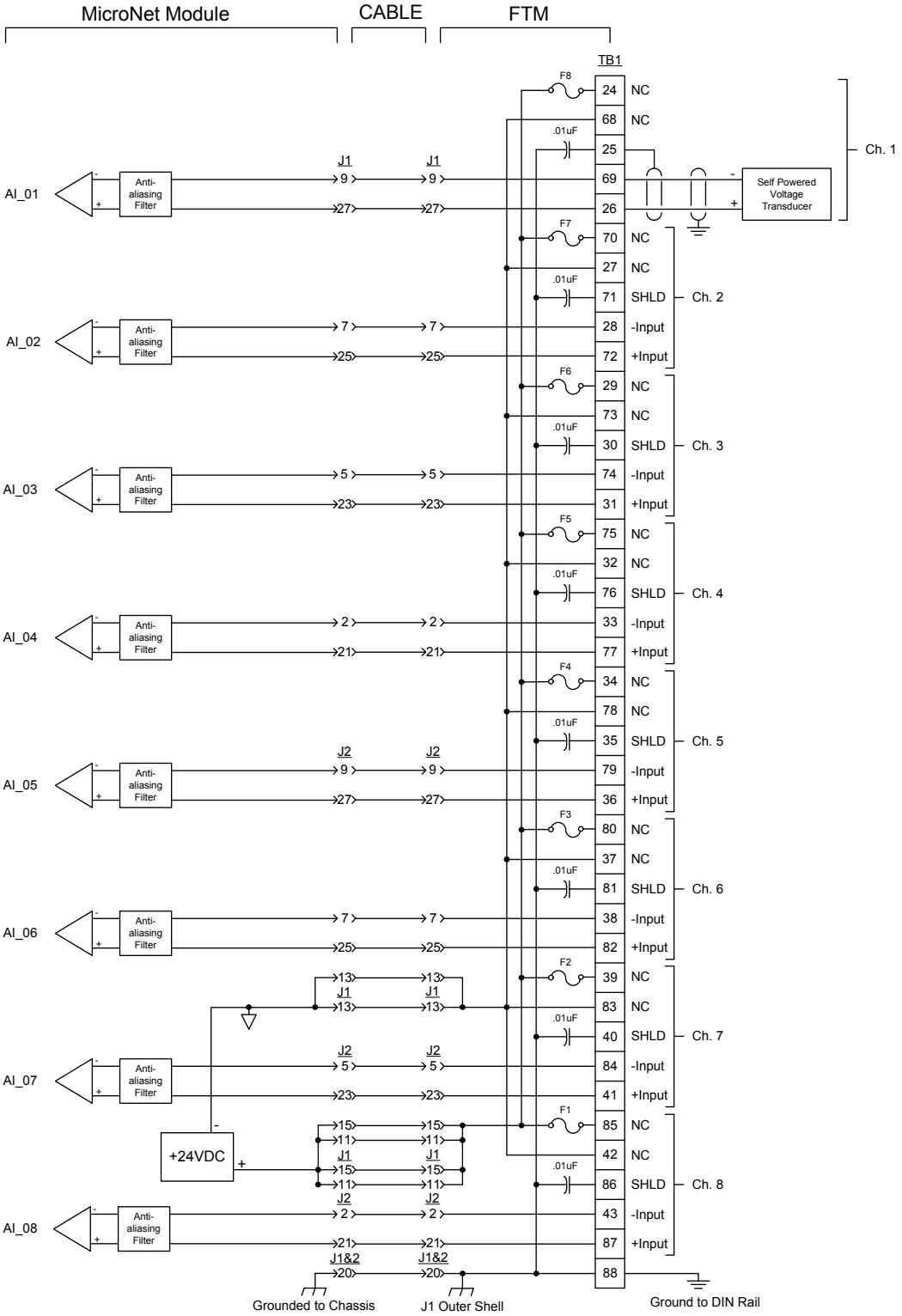

Figure 7-9—Voltage Input Wiring for an Analog Combo Module FTM

Analog Outputs
The analog outputs are 4–20 mA with a full-scale range of 0–25 mA. Each output monitors the output source current for fault detection. All of the analog outputs may be individually disabled. When a channel fault or a module fault is detected, the application program may annunciate the fault, disable the channel or module, and stop using the data in system calculations or control.

The Analog Combo module has four 4–20 mA current output drivers. All analog outputs can drive a maximum load of 600 ohms (load + wire resistance). Care should be taken to prevent ground loops and other faults when interfacing to non-isolated devices. See Figure 9-19 for an example of 4–20 mA output wiring.

Actuator Outputs
The actuator outputs may be configured for 4–20 mA or 20–160 mA. Configuration is done through the application software; no hardware modifications in the forms of jumpers or switches are necessary. For fault detection, each output monitors the output source current and the output return current. All of the actuator outputs may be individually disabled. When a channel fault or a module fault is detected, the application program may annunciate the fault, disable the channel or module, and stop using the data in system calculations or control.

Dither may be provided in the application software for each output. Dither is a low frequency (25 Hz) signal consisting of a 5 millisecond pulse modulated onto the DC actuator-drive current to reduce sticking due to friction in linear type actuators. Woodward TM-type actuators typically require dither. Dither amplitude is variable through the application software. See Figure 9-19 for an example of actuator wiring.

IMPORTANT **For a dual coil actuator in a simplex system, two actuator driver outputs must be used.**

Configuration Notes
- Maximum impedance for a 4 to 20 mA actuator output driver is 360 ohms (actuator impedance + wire resistance).
- Maximum impedance for a 20 to 160 mA actuator output is 45 ohms (actuator impedance + wire resistance).
- Each actuator driver senses its source and return current to allow overcurrent and undercurrent alarms and shutdowns.

7.4.4—FTM Reference

See Chapter 8 for complete Analog Combo FTM field wiring information. See Appendix A for proper Module, FTM, and cable part numbers.

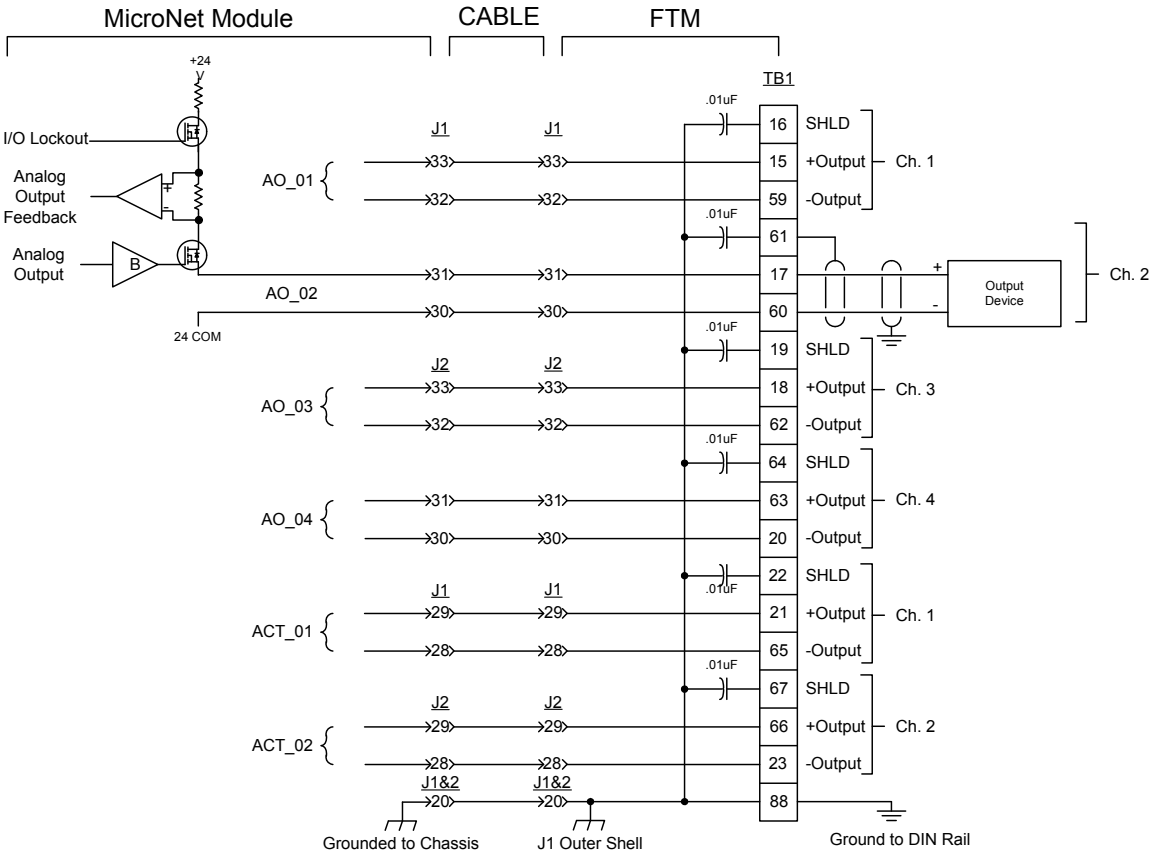

Figure 7-10—Analog Output and Actuator Wiring for an Analog Combo FTM

7.4.5—Troubleshooting

Fault Detection (Module Hardware)

Each Analog Combo module has a red Fault LED that is turned on when the system is reset. During initialization of a module, which occurs after every CPU reset, the CPU turns the Fault LED on. The CPU then tests the module using diagnostic routines built into the software. If the diagnostic test is not passed, the LED remains on or blinks. If the test is successful, the LED goes off. If the Fault LED on a module is illuminated after the diagnostics and initialization have been completed, the Analog Combo module may be faulty or may be located in the wrong slot.

Number of LED Flashes	Failure
1	Hardware watchdog, CPU clock failure, reset fail
2	Micro-controller internal RAM test failure
3	External RAM test failure
4	Unexpected exception error
5	Dual Port RAM test failure
6	EEPROM failure
7	Communications watchdog time out

Table 7-2—LED Indications of Failure

Fault Detection (I/O)
In addition to detecting module hardware faults, the application program may detect I/O faults.

Analog Input Faults. The application software may set a high and low latch set point to detect input faults.

Speed Sensor Input Faults. The application software may set a high and low latch set point to detect input faults. The low latch set point must be greater than one fiftieth of the frequency range.

Analog Output Driver Faults. The module monitors the source currents and annunciates faults. The application determines the course of action in the event of a fault.

Actuator Driver Or Load Faults. The module monitors the source and return currents and annunciates faults. The application determines the course of action in the event of a fault.

Micro-controller Faults. The system monitors a software watchdog, a hardware watchdog, and a software watchdog on the VME bus communications. All outputs are shutdown in the event of a microcontroller fault.

Troubleshooting Guide
If during normal control operation all of a chassis' Analog Combo modules have Fault LEDs on, check the chassis' CPU module for a failure. If during normal control operation only the Analog Combo module's Fault LED is on or flashing, insure that it is installed in the correct slot. If it is, then replace that Analog Combo module. See instructions for replacement in Chapter 9, Installation. When a module fault is detected, its outputs should be disabled or de-energized.

Speed Sensor Inputs
MPUs. If a magnetic pickup input is not functioning properly, verify the following:

1. Check that the cable is shielded and the shield is properly grounded per the Shields and Grounding section in Chapter 9, Installation.
2. Measure the input voltage on the terminal block. It should be in the range of 1–25 VRMS.
3. Verify that the signal waveform is clean and void of double zero crossings.
4. Verify that no ground connection exists and that the resulting 60 Hz signal is absent.
5. Measure the frequency. It should be in the range of 100 Hz - 25 kHz.
6. Verify that any unused MPU/Prox inputs are jumpered per Figure 9-16.
7. Check the wiring. Look for a loose connection at the terminal blocks and disconnected or misconnected cables.
8. Check the software configuration to ensure that the input is configured properly.
9. After verifying all of the above, exchange the J1 and J2 cables. If the problem moves to a different channel, replace the cable. If not, replace the Analog Combo module.
10. If the readings are incorrect on several channels of the module, corresponding to both cables, replace the Analog Combo module.
11. If replacing the module does not fix the problem, replace the FTM. See instructions for replacing the FTM in Chapter 9, Installation. The FTM does not contain any active components on the MPU inputs, so replacing it should be the last option.

Proximity Probes

If a proximity probe input is not functioning properly, verify the following:

1. Check that the cable is shielded and the shield is properly grounded per the Shields and Grounding section in Chapter 9, Installation.
2. Measure the input voltage on the terminal block. It should be in the range of 3.5 – 32 Vpeak.
3. Verify that the signal waveform is clean and void of double zero crossings.
4. Verify that no ground connection exists and that the resulting 60 Hz signal is absent.
5. Measure the frequency. It should be in the range of 0.5 Hz to 25 kHz.
6. Verify that any unused MPU/Prox inputs are jumpered per Figure 9-16.
7. Check the wiring. Look for a loose connection at the terminal blocks, disconnected or misconnected cables, a missing jumper on the terminal block, or a blown fuse on the 24 Vdc on the FTM.
8. Check the software configuration to ensure that the input is configured properly.
9. After verifying all of the above, exchange the J1 and J2 cables. If the problem moves to a different channel, replace the cable. If not, replace the Analog Combo module.
10. If the readings are incorrect on several channels of the Analog Combo module, corresponding to both cables, replace the Analog Combo module.
11. If replacing the module does not fix the problem, replace the FTM. See instructions for replacing the FTM in Chapter 9, Installation. The FTM contains only a wire-wound 3 W resistor and traces, so failure is extremely unlikely and replacing it should be the last option.

Analog Inputs

If an analog input is not functioning properly, verify the following:

1. Check that the cable is shielded and the shield is properly grounded per the Shields and Grounding section in Chapter 9, Installation.
2. Measure the input voltage on the terminal block. It should be in the range of 0-5 V.
3. Verify that there are no or minimal AC components to the Analog Input signal. AC components can be caused by improper shielding.
4. Check the wiring. If the inputs are reading 0 or the engineering units that correspond to 0 mA or volts, look for a loose connection on the terminal blocks, disconnected or misconnected cables, a missing jumper on the terminal block if the input is a current input, or a blown fuse on the 24 Vdc on the FTM.
5. If all of the inputs are reading high, check that the 24 Vdc is not connected across the input directly.
6. Check the software configuration to ensure that the input is configured properly.
7. Check the fuse on the FTM. See the instructions and fuse locations below.
8. If the other channels on the Analog Combo module are not working either, check the fuse on the Analog Combo module. See instructions for module replacement in Chapter 9, Installation. This fuse is visible and can be changed through the bottom of the module. If the fuse is blown, fix the wiring problem, then replace the fuse with another fuse of the same type and rating.
9. After verifying all of the above, exchange the J1 and J2 cables. If the problem moves to a different channel, replace the cable. If not, replace the Analog Combo module.
10. If the readings are incorrect on several channels of the module, corresponding to both cables, replace the Analog Combo module.

11. If replacing the module does not fix the problem, replace the FTM. See instructions for replacing the FTM in Chapter 9, Installation. The FTM does not contain any active components on the MPU inputs, so replacing it should be the last option.

Analog Outputs

If an analog output is not functioning properly, verify the following:

1. Check that the cable is shielded and the shield is properly grounded per the Shields and Grounding section in Chapter 9, Installation.
2. Check the load resistance to ensure that it is not greater than 600 ohms.
3. Check to ensure that the load wiring is isolated.
4. Check the wiring for a loose connection on the terminal blocks and disconnected or misconnected cables.
5. Disconnect the field wiring and connect a resistor across the output. If the output is correct across the resistor, there is a problem with the field wiring.
6. If the other output channels on the Analog Combo module are also not working, check the fuse on the Analog Combo module. See instructions for module replacement in Chapter 9, Installation. This fuse is visible and can be changed through the bottom of the module. If the fuse is blown, fix the wiring problem and replace the fuse with a fuse of the same type and rating.
7. Check the software configuration to ensure that the output is configured properly.
8. After verifying all of the above, exchange the J1 and J2 cables. If the problem moves to a different channel, replace the cable. If not, replace the Analog Combo module.
9. If the readings are incorrect on several channels of the module, corresponding to both cables, replace the Analog Combo module.
10. If replacing the module does not fix the problem, replace the FTM. See instructions for replacing the FTM in Chapter 9, Installation. The FTM does not contain any active components on the MPU inputs, so replacing it should be the last option.

Actuator Outputs

If an actuator output is not functioning properly, verify the following:

1. Check that the cable is shielded and the shield is properly grounded per the Shields and Grounding section in Chapter 9, Installation.
2. Check the load resistance to ensure that it is below the specified limit.
3. Check to ensure that the load wiring is isolated.
4. Check the wiring for a loose connection on the terminal blocks or disconnected or misconnected cables.
5. Disconnect the field wiring and connect a resistor across the output.
6. If the other output channels on the Analog Combo module are also not working, check the fuse on the Analog Combo module. See instructions for module replacement in Chapter 9, Installation. This fuse is visible and can be changed through the bottom of the module. If the fuse is blown, fix the wiring problem, and replace the fuse with a fuse of the same type and rating.
7. Check the software configuration to ensure that the output is configured properly.
8. After verifying all of the above, exchange the J1 and J2 cables. If the problem moves to a different channel, replace the cable. If not, replace the Analog Combo module.
9. If the readings are incorrect on several channels of the module, corresponding to both cables, replace the Analog Combo module.

10. If replacing the module does not fix the problem, replace the FTM. See instructions for replacing the FTM in Chapter 9, Installation. The FTM does not contain any active components on the MPU inputs, so replacing it should be the last option.

Replacing a Fuse on the Field Terminal Module (FTM)

1. Verify that the condition that caused the fuse to blow has been corrected.

WARNING **If power has not been removed from the control system, power will be active at the module and also at the FTM. Shorting of protected circuitry could cause a control system shutdown.**

2. Remove FTM cover carefully, to prevent contact with any FTM circuitry under the cover. To remove the FTM cover, pinch the retaining barb and lift the cover.
3. Locate and replace the fuse with another fuse of the same size and rating.
4. Replace the FTM cover.

Chapter 8.
Field Termination Modules (FTMs)

8.1—Introduction

Field Termination Modules (FTM) are used to connect field wiring to the front of the MicroNet control's I/O Modules. They connect to the subminiature D-type connectors on the front of the I/O modules and provide cage-clamp terminal connection points for field wiring. They also provide shield termination and EMI protection. All FTMs can be mounted on 35 mm DIN Rails and take the place of interposing terminal blocks to field wiring.

The cage-clamp terminals on the FTMs and relay modules accept a maximum of one #12 AWG wire or two #18 AWG wires. Field wiring hookup is performed by stripping the wire back 0.312 inches (8 mm), inserting into the cage clamp and tightening the screw.

8.2—Analog I/O FTMs

8.2.1—24/8 Analog FTM

The 24/8 Analog FTM is used with the 24/8 Analog Modules (see Chapter 7 MicroNet module information and Appendix A for FTM part number). One MicroNet High Density Analog/Discrete cable is use to connect the FTM with the 24/8 Analog Module (see Appendix A for part numbers). There are twelve +24 Vdc connections available for sourcing 4-20 mA inputs. Each connection is protected with a 0.1 A fuse.

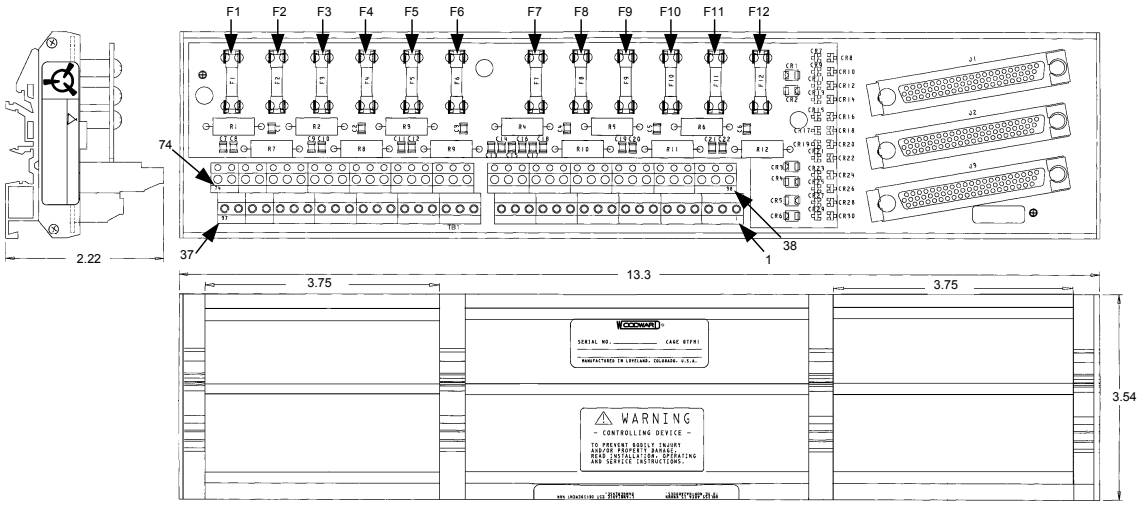

Figure 8-1—24/8 Analog FTM Outline Dimensions

Replacing a Fuse on the Field Termination Module (FTM)

1. Verify that the condition that caused the fuse to blow has been corrected.

WARNING **If power has not been removed from the control system, power will be active at the module and also at the FTM. Shorting of protected circuitry could cause a control system shutdown.**

2. Remove the FTM cover carefully, to prevent contact with any FTM circuitry under the cover. To remove the FTM cover, pinch the retaining barb and lift the cover.
3. Locate and replace the fuse with another fuse of the same size, type, and rating,. See Figure 13-4 for channel fuse location.
4. Replace the FTM cover.

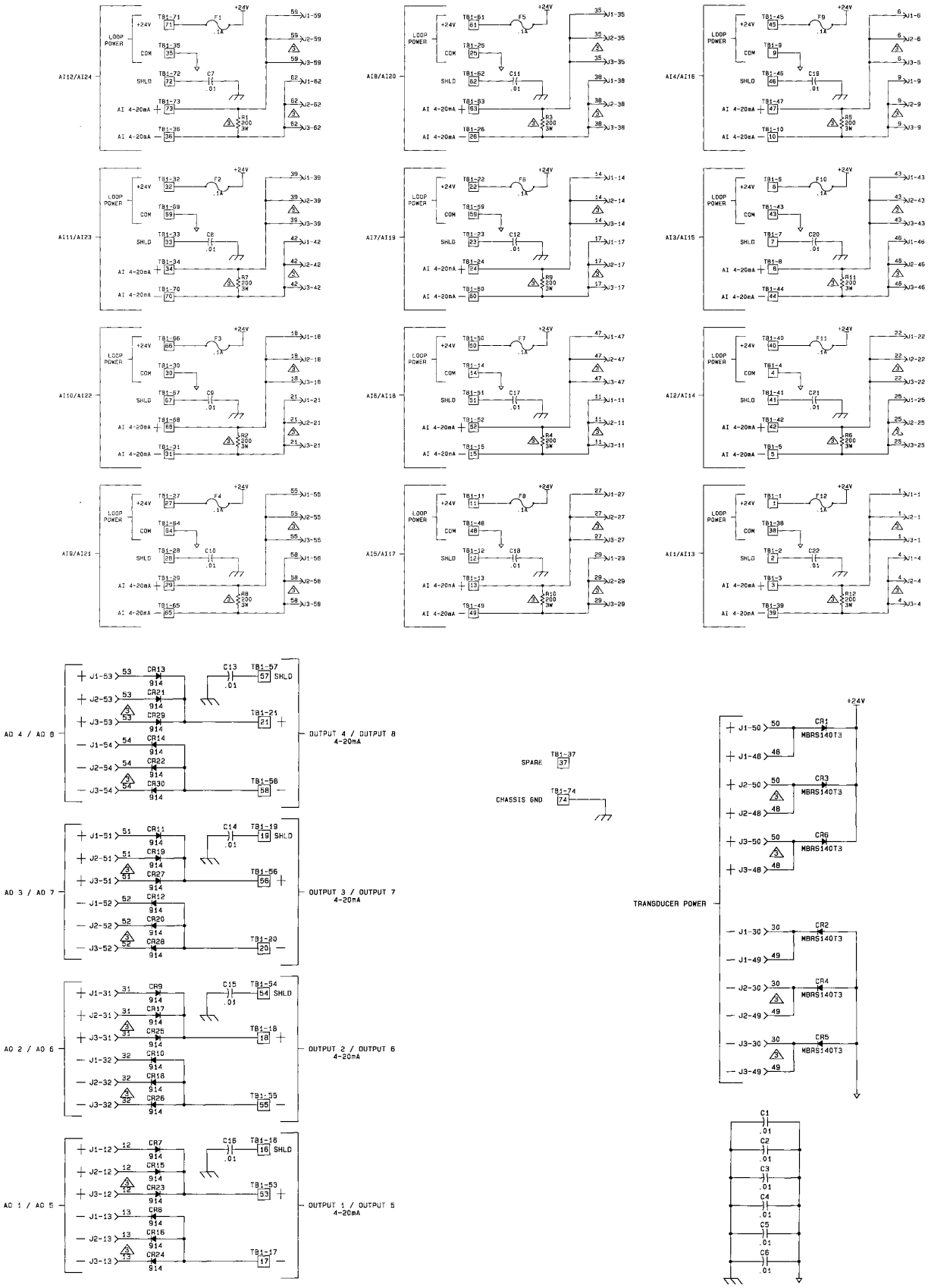

Figure 8-2—24/8 Analog FTM Schematic

8.2.2—Analog Combo I/O (Option)

The Analog Combo FTM is used with Analog Combo module (see Chapter 7 MicroNet module information and Appendix A for FTM part number). The FTM can connect to four speed sensor inputs, eight analog inputs, four analog outputs, and two proportional actuator driver outputs. Two MicroNet Low Density Analog cable are used to connect the FTM with the Analog Combo module (see Appendix A for part numbers). There are eight +24 Vdc connections available for sourcing 4-20 mA inputs. Each connection is protected with a 0.1 A fuse (F1-F8). There are four +24/12 Vdc output connections available for powering four proximity sensors. Each of these connections are protected with a 0.1 A fuse (F9-F12).

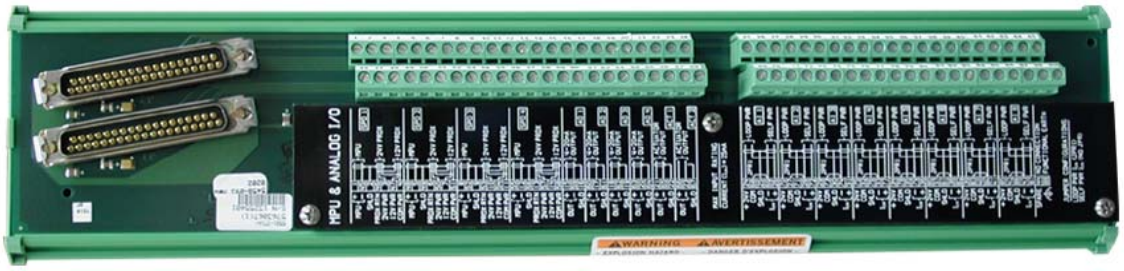

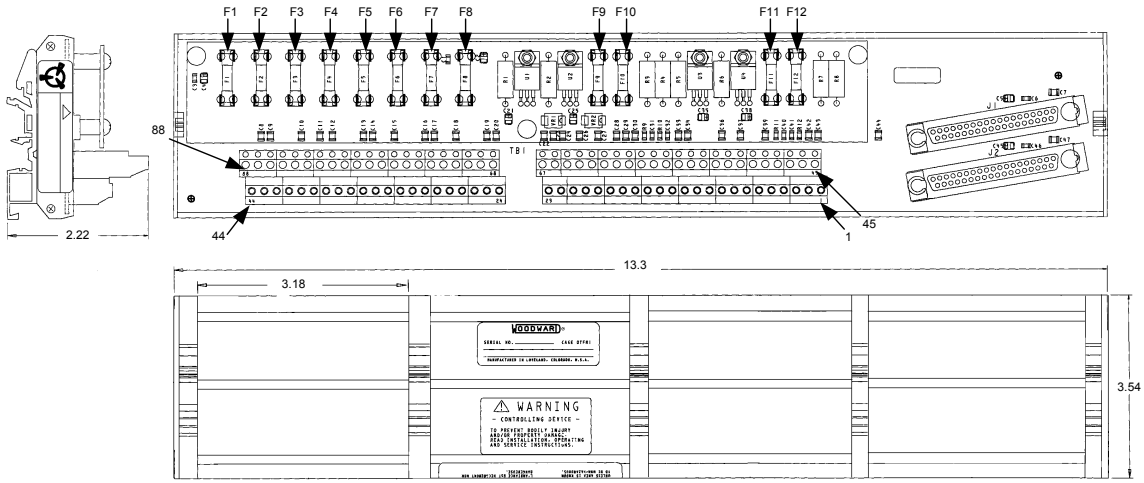

Figure 8-3—Analog Combo FTM Outline Dimensions

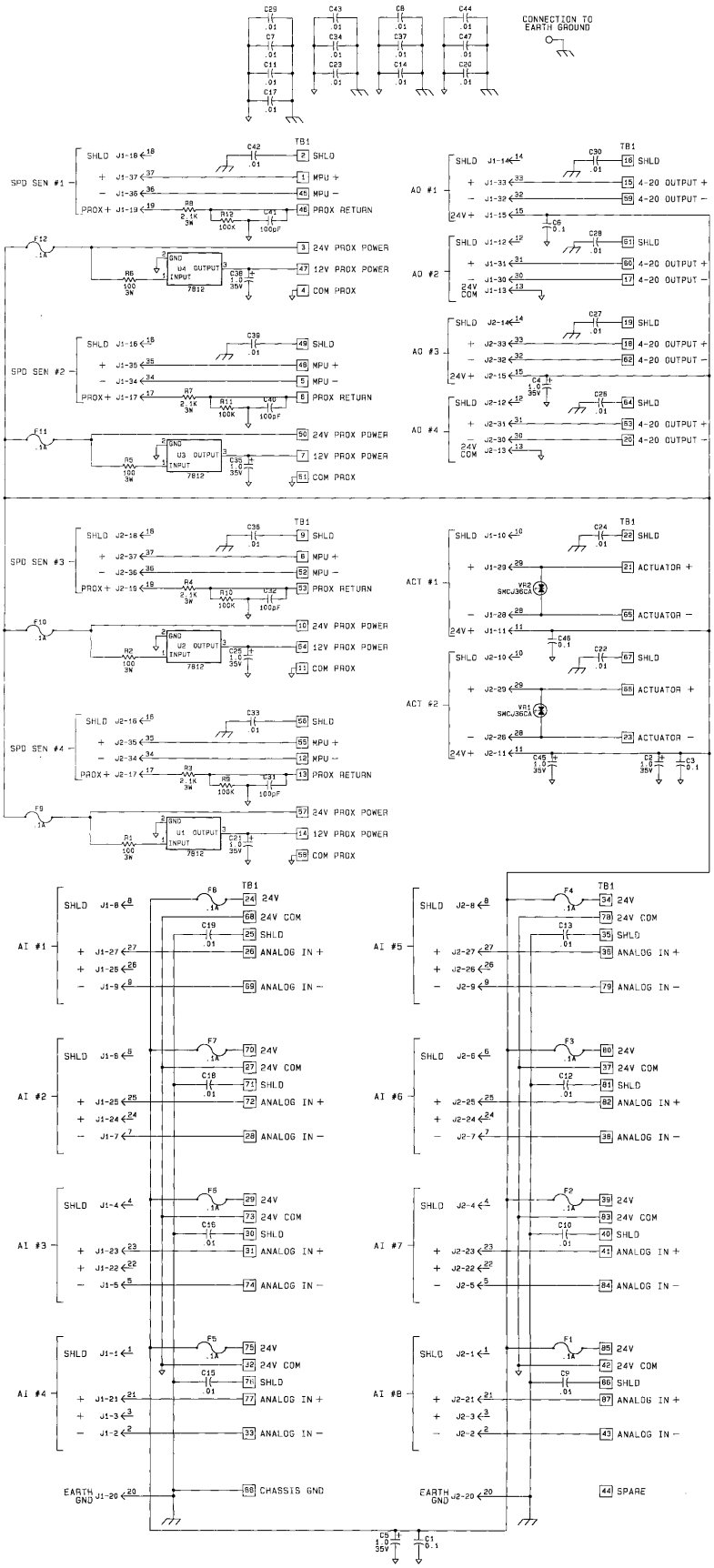

Figure 8-4—Analog Combo FTM Schematic

8.3—Discrete I/O FTM

8.3.1—24/12 Discrete Module (Phoenix Contact)

IMPORTANT **This relay module is for use in ordinary or non-hazardous locations only.**

The 24/12 Discrete Module is used with 48/24 Discrete Combo Module (see Chapter 6 MicroNet module information and Appendix A for FTM part number). The 24/12 Discrete Module has 24 discrete inputs connections and 12 SPDT relay outputs. Two relay modules connect to one 48/24 Discrete Combo Module. Each FTM uses one MicroNet High Density Analog/Discrete cable to connect it with the 48/24 Discrete Combo Module (see Appendix A for part numbers). This relay module incorporates an I/O lockout relay that will de-energize all of the relays if de-activated by the I/O lock signal from the DO module. All field connections use removable connectors for ease in replacing module in the field. All relays are field replaceable.

Relays (see Appendix A)
Output Rating:
10 A @ 28 Vdc Resistive
3 A @ 150 Vdc Resistive
10 A @ 115 Vac Resistive
10 A @ 240 Vac Resistive
3 A @ 28 Vdc Inductive
1.2 A @ 150 Vdc Inductive
6 A @ 115 Vac Inductive
3 A @ 240 Vac Inductive

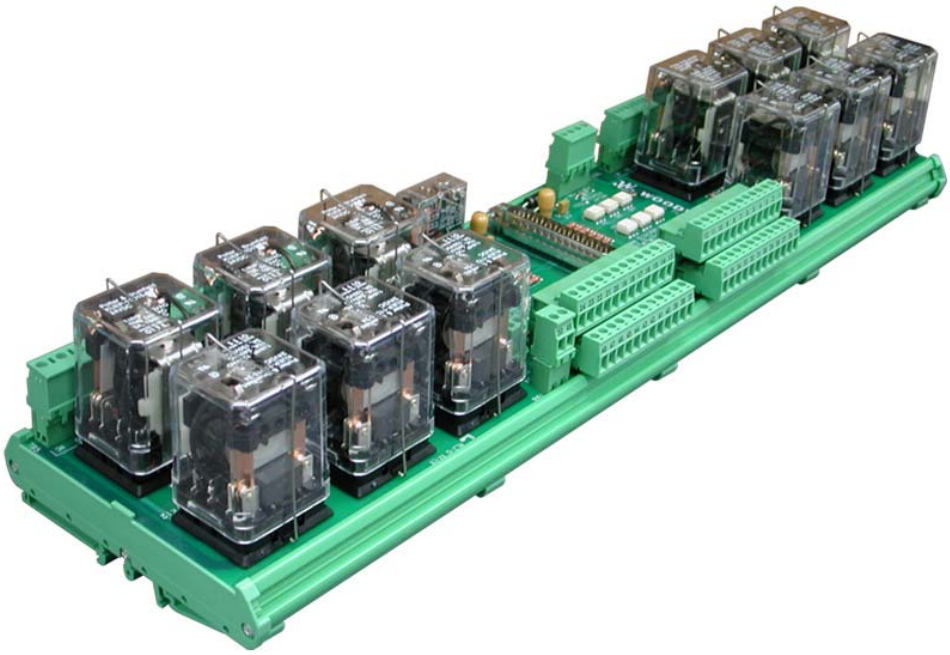

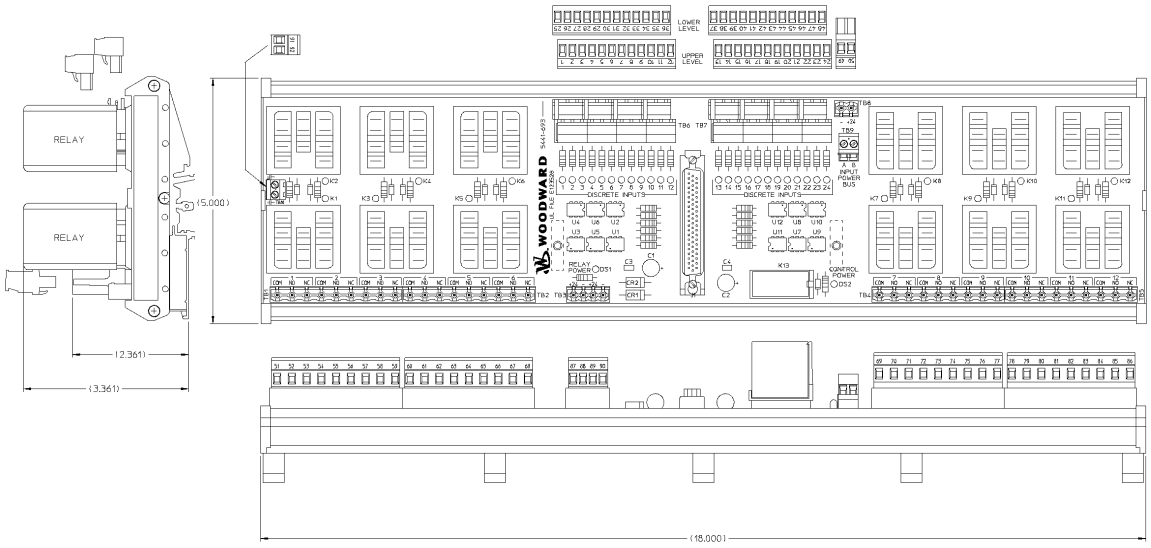

Figure 8-5—24/12 Discrete Module Outline Dimensions

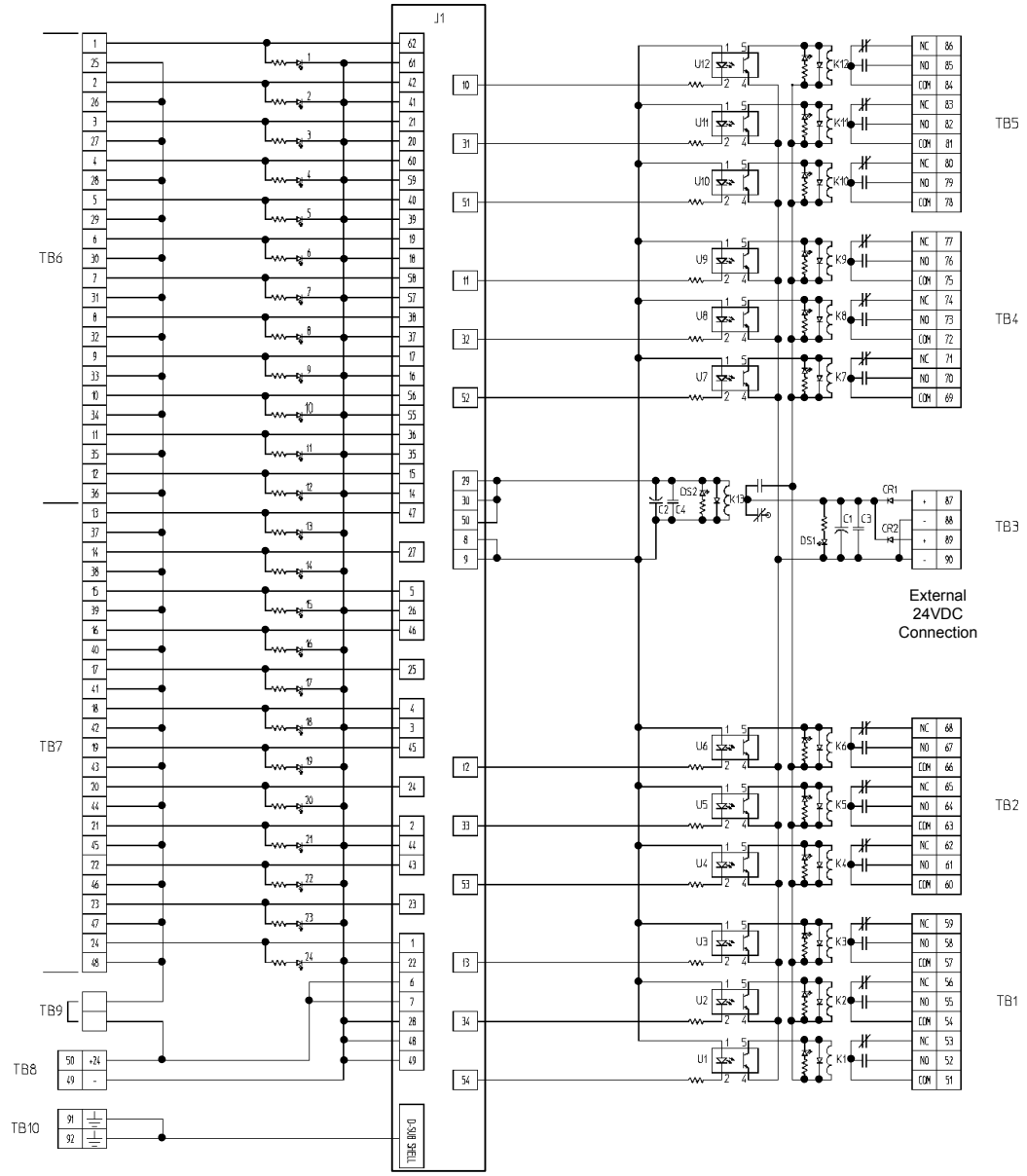

Figure 8-6—24/12 Discrete Module Schematic

Chapter 9.
Installation and Replacement Procedures

9.1—Pre-Installation Information

9.1.1—Storage

Store MicroNet™ controls and associated parts between –20 and +70 °C (–4 and +158 °F) at a maximum relative humidity of 90% non-condensing. If modules (especially power supplies) are to be stored for a long time, apply operating power to them at least once every 18 months. This is done to re-form the aluminum electrolytic capacitors, and will prevent them from overheating upon initial power up after extended storage.

9.1.2—Unpacking

Unpack each part of the system carefully. Check the units for signs of damage, such as bent or dented panels, scratches, or loose or broken parts. If any damage is found, notify the shipper immediately.

9.1.3—Unit Location

Consider the following when selecting a cabinet location for mounting the MicroNet:

- Make sure the MicroNet unit(s) are mounted in a dry location, protected from water and condensation.
- Make sure the ambient temperature of the system location is not lower than 0 °C (32 °F) or higher than 55 °C (131 °F) and that the relative humidity is not over 90%, non-condensing. (**NOTE**—For NTCPU 0–50 °C)
- Provide adequate ventilation for cooling the units. If the units must be mounted near heat-producing devices, shield them from the heat.
- Do not install the units or their connecting wires near high-voltage/high-current devices or inductive devices. If this is not possible, shield both the system connecting wires and the interfering devices or wires.
- If the selected location does not already have a conductor to a good earth ground, provide one.
- This equipment is suitable for Class I, Division 2, Groups A, B, C, and D or non-hazardous locations only. The 24/12 and 16 channel relay modules are for use in ordinary or non-hazardous locations only.

9.2—Installation Procedures

WARNING

EXPLOSION HAZARD—Do not remove or install modules while circuit is energized unless area is known to be non-hazardous.

AVERTISSEMENT

RISQUE D'EXPLOSION—Ne pas enlever ni installer les cartes pendant que le circuit est sous tension sans s'assurer que la zone est non dangereuse.

9.2.1—Installing a VME Module

IMPORTANT

Before installing a module, check for broken connectors and bent pins.

1. Be sure that each module is installed in the correct slot. There are no keys to keep a module from being installed in the wrong slot. To aid in proper module placement, the module slots are labeled with the slot number. Prior to installing, verify that all connector pins are parallel and straight.

2. Align the circuit board edges in the card guides and push the module into the slot until the connector on the module and the connector on the motherboard make contact.

3. With even pressure exerted at the top and bottom of the module, firmly push the module into place.

IMPORTANT

If resistance is encountered when installing a module, do not force the module. Remove the module and check the connectors for bent contacts or foreign objects. Also check to ensure that the module screws are fully retracted. Forcing a module into place may break the connector or bend the securing screws.

4. Tighten the two screws that secure the module in place (one at the top and one at the bottom).

9.2.2—MicroNet Simplex Installation Notes and Warnings

WARNING

The MicroNet Simplex main power supplies must have the input power removed before installing or removing.

This equipment is suitable for use in Class I, Division 2, Groups A, B, C, and D or non-hazardous locations only.

The 24/12 and 16 channel relay modules are for use in ordinary or non-hazardous locations only.

Wiring must be in accordance with Class I, Division 2 wiring methods and in accordance with the authority having jurisdiction.

9.2.3—Installing a MicroNet Plus Power Supply Module

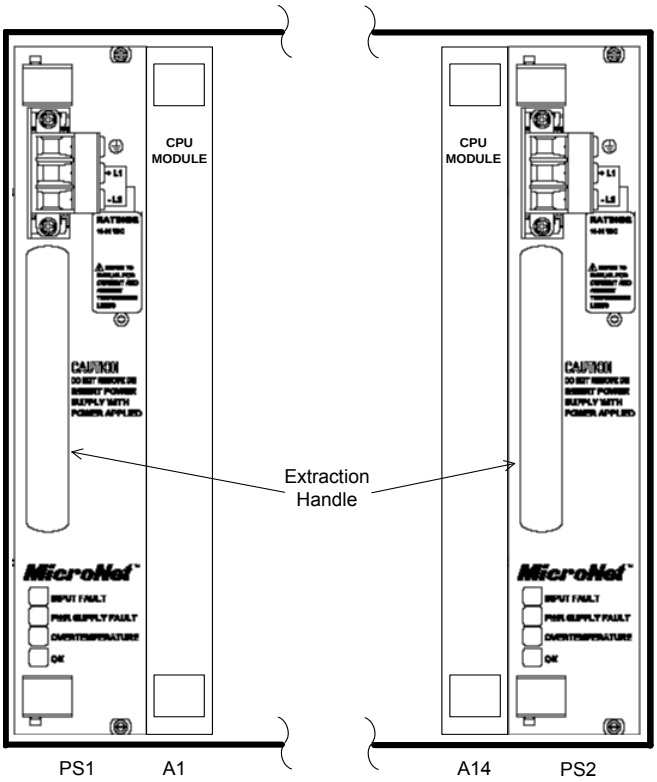

Figure 9-1—MicroNet Power Supply

Installing a Power Supply (PS1, PS2)

1. Be certain power to the supply being installed is disconnected. Verify that all pins in the module connectors are parallel and straight.
2. Install a new power supply by aligning the circuit board edges in the card guides, then pushing the unit into the slots until the connectors on the modules and the connectors on the motherboard make contact.
3. With even pressure exerted at the top and bottom of the supply's front panel, firmly push the unit into place. Alternatively, apply force to the extraction handle.
4. Tighten the screws that secure the module in place.

IMPORTANT

If resistance is encountered when installing a module, do not force the module. Remove the module and check the connectors for bent contacts or foreign objects. Also check to ensure that the module screws are fully retracted. Forcing a module into place may break the connector or bend the securing screws.

9.2.4—Installing the FTMs

The system's Field Terminal modules (FTMs) mount on a standard DIN (35 x 7.5) rail (not provided). Mount FTMs within the length of the provided cable from the control's main chassis, leaving an adequate service loop.

1. Cut a DIN rail strip to the desired length and mount it to a panel. Leave sufficient space between the DIN rail and other objects for accessibility.
2. Drill and tap at least two holes per 300 mm (12 in) for appropriately sized hardware, and secure the DIN rail using screws and washers.
3. Verify that the DIN rail is at earth ground potential (connected to a panel that is at earth ground potential). If the DIN rail is not at earth ground potential, connect it to earth ground via a 4 mm² (12 AWG) green/yellow wire or braid, keeping the wire or braid as short as possible.
4. Snap the FTMs onto the DIN rail.
5. Snap ground terminals onto the DIN rail next to the FTMs. See Figure 19-7.
6. Connect a 4 mm² (12 AWG) wire between each ground terminal and the FTM earth ground terminal. Torque to 0.37 to 0.5 to 0.8 Nm (0.59 ft lbs). This wire should be kept short for optimum high frequency grounding. It must be no longer than 150 mm (6 in) in length.

   After both the FTM and the module are installed, the cables that connect them may be installed.

Wiring Notes
It is recommended that 0.5 mm² (20 AWG) or larger twisted, shielded wire be used between each external device and FTM.

- Cable shields must be electrically continuous from the signal source to the point the signal wire enters the FTM.
- FTM terminals accept wires from 0.25–2.5 mm² (24–12 AWG) wire. Two 0.75 mm² (18 AWG) or three 0.5 mm² (20 AWG) wires can be installed in each terminal. Torque 0.5 to 0.8 N·m (0.37 to 0.59 lb-ft).
- Take care to prevent ground loop wiring when interfacing to other devices.
- Do not place shielded wires in the same conduit as high voltage or large current-carrying cables.

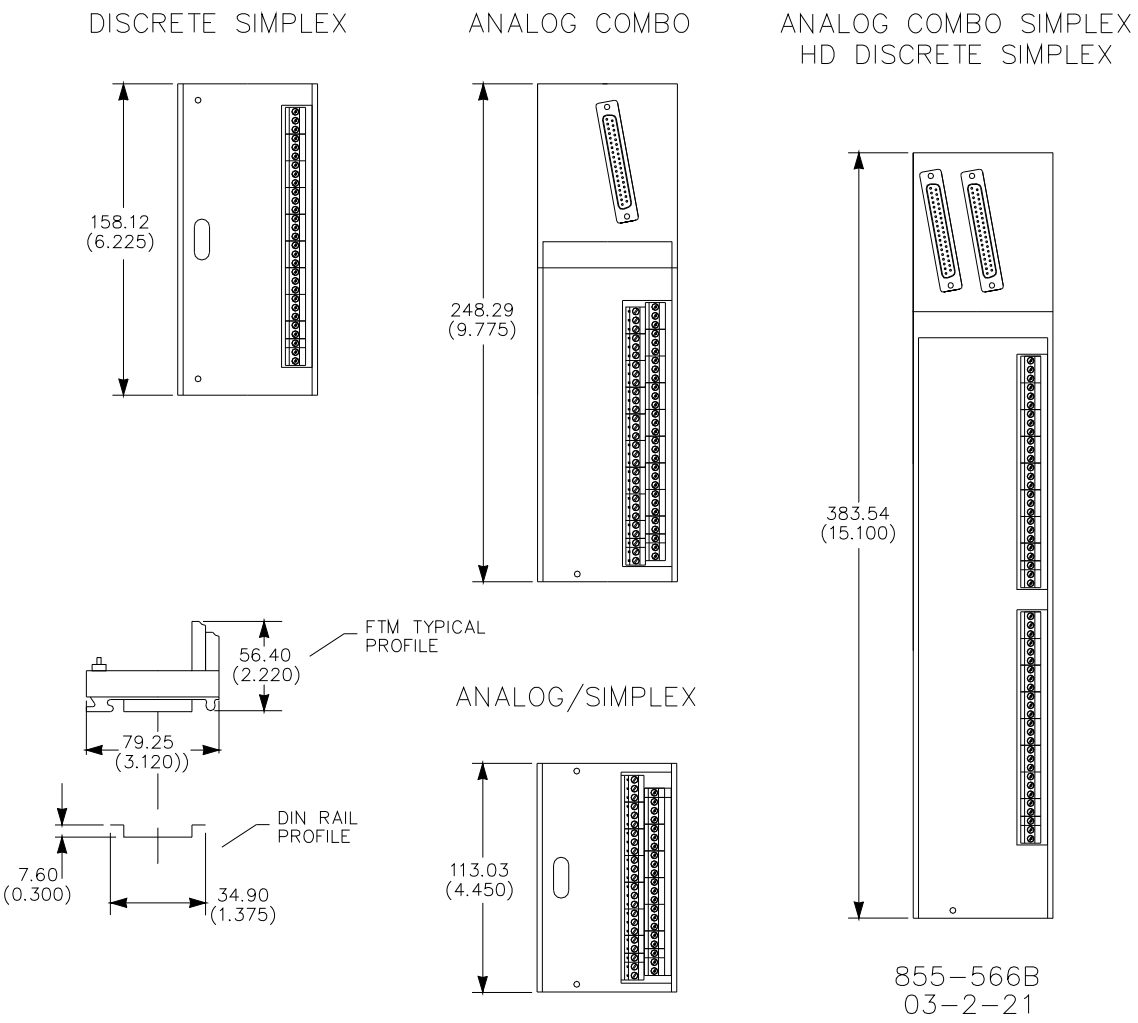

Figure 9-2—FTM Grounding and Outlines

9.2.5—Non-Marine Application Information

9.2.5.1—Shields and Grounding

WARNING **Do not connect chassis ground or PE ground to signal common.**

An individual shield termination is provided at the FTM terminal block for each of the analog inputs and analog outputs. All of the analog inputs and outputs should be wired using shielded, twisted-pair wiring. The shields should be connected to earth ground at one point only as well as terminated at the FTM terminal block; which will typically AC couple the shield to earth ground. See application note 51204 for a more detailed discussion on shield terminations. The length of exposed wire extending beyond the shield should be limited to 25 mm (1 inch). Relay outputs, contact inputs, and power supply wiring do not normally require shielding, but can be shielded if desired.

If the panel that the control chassis and FTMs are mounted on is not at earth ground potential, connect it to earth ground via a 4 mm² (12 AWG) green/yellow wire or braid, keeping the wire or braid as short as possible.

For compliance with EMC standards, it is required that all analog and discrete input/ output wiring be separated from all power wiring.

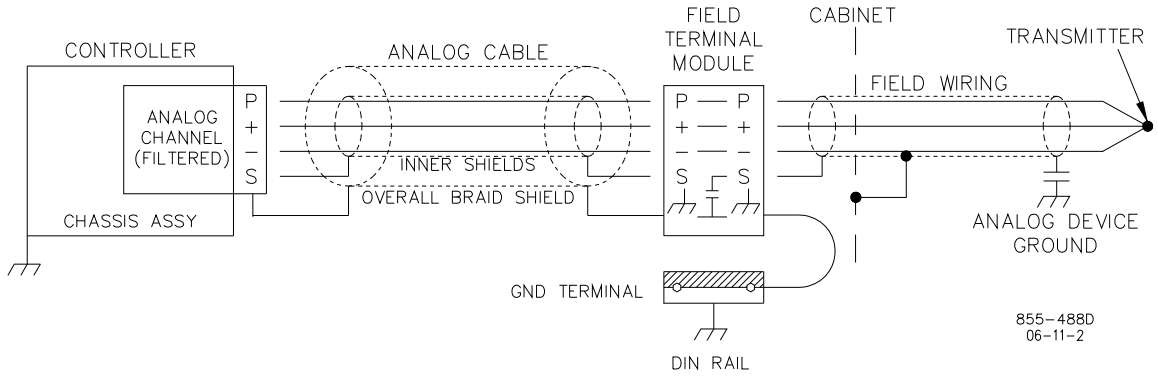

Figure 9-3—Shield Termination Diagram Example

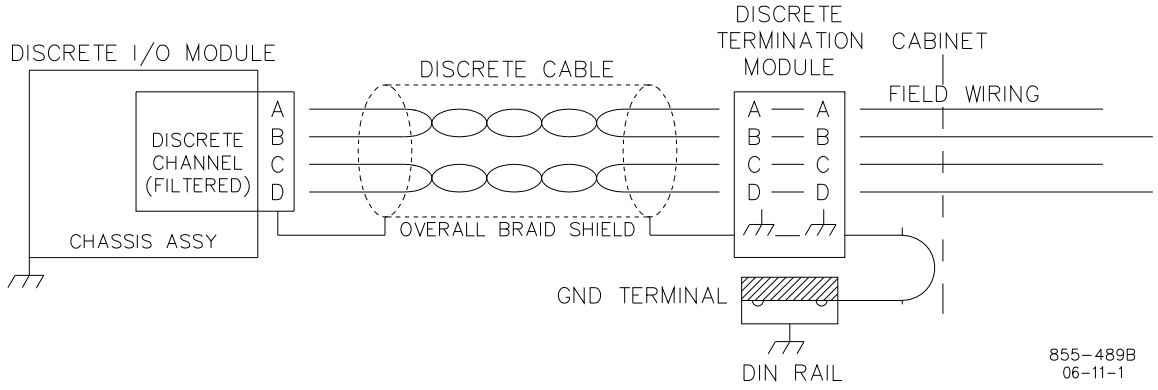

Figure 9-4—Discrete FTM Grounding Diagram Example

9.2.5.2—Cabinet Structural Grounding

- The cabinet needs to be a six-sided metal enclosure.
- If a glass door is needed, the door must provide >20 dB of attenuation from 10 kHz to 1 GHz.
- Floor and top must provide holes for cable entry.
- Top and bottom cable entry areas must be restricted in size, largest dimension of any aperture (hole) no greater than 152 mm/6”.
- When RF transmitters (hand-held radios) can be located below the plane of the floor, floor entry areas shall be restricted in size, with largest dimension of any aperture (hole) no greater than 152 mm/6”.
- When RF transmitters (hand-held radios) cannot be located below the plane of the floor, no floor entry areas restrictions are required.
- The cabinet frame and mounting areas must be bonded (grounded together).
- Frame shall be electrically connected at each structural interface (<2.5 mΩ).

- Mounting plates shall be electrically connected to structural frame (<2.5 mΩ).
  - 4 places minimum, 6 places preferred.
- Door must be electrically connected to the main structural frame (<2.5 mΩ).
  - 2 places minimum, 3 places preferred.
  - use of 25 mm/1" wide bond straps is preferred.
  - Install bond straps at the locations that I/O cables cross the door hinge.
- Cover panels shall be electrically connected to structural frame (<10 mΩ).
  - 1 place minimum, 2 places preferred (placed at opposite sides).
- Floor and top must be electrically connected to structural frame (<2.5 mΩ).
  - 2 places minimum, 4 places preferred.
- DIN rail must be electrically connected to structural frame (<2.5 mΩ).
  - Once every 12", use a minimum of 2 screws to bond a DIN rail to cabinet frame.

9.2.5.3—Cable Entry Locations

- Cable shield termination hardware must be installed at cable entry points.
- Cable shield terminations must be electrically connected to structural frame (<2.5 mΩ), and shall allow direct grounding or AC grounding of cable shields.

9.2.5.4—Equipment Zoning (Segregation)

Separate the equipment inside the cabinet into areas:

- Analog equipment area
- Discrete I/O equipment areas
- Shielded I/O area
- Un-shielded I/O area
- Power area
- Light Industrial compliant equipment area
- Monitor/kybd/pointing device (HMI if applicable)
- Other equipment area

Maintain a minimum or 6" of separation between areas

9.2.5.5—Input Power Routing and Filtering

- Input power must enter the cabinet and be routed separately from all other circuits.
- Route power in middle at back of cabinet. All other I/O and internal cabling must be kept more than 152 mm/6" away.
- Input power must route directly to controls that are Industrial compliant.
- Input power that must route to controls that are Light Industrial compliant must be filtered with a minimum of 20 dB filtering.
- Input power that must be routed near other cabling will be filtered prior to the point they are on a common path. Filter with a 20 dB filter.

IMPORTANT

Light Industrial equipment is defined as equipment that is designed and tested to comply with European Union (EU) directives (e.g. EN61000-6-1 or EN61000-6-3) for Light Industrial environments. Industrial compliant equipment is designed and tested for the EU directives for Heavy Industrial environments.

9.2.5.6—Analog I/O Routing and Shield Termination

I/O Module in Cabinet

- Use shielded cable from MicroNet module to I/O module (FTM, Analog Driver etc.)
- Locate I/O module as close to I/O cable entry point as possible
- Locate I/O module away from unshielded discrete areas (> 152 mm/6")

I/O Cable w/ I/O Module in Cabinet

- Route I/O cable against cabinet metal wall from entry point to I/O module
- Ground I/O cable shield, direct, to cabinet at entry point
  - If overbraided, ground overbraid shield to cabinet - connect inner braids at I/O module termination point. The inner braid must still be directly grounded to earth at one point.
  - If single shield, ground shield to cabinet
- If I/O cable is grounded direct (DC coupled) at remote end of cable, ground the I/O cable shield capacitively at I/O module in cabinet and at the cable entry point into the cabinet

I/O Module not in Cabinet

- Route cable from MicroNet module to I/O module with cable against cabinet metal wall
- Ground cable shield at entry point to cabinet and at I/O module

I/O Cable w/o I/O Module in Cabinet

- Connect all braids at I/O module termination point

9.2.5.7—Discrete I/O Routing and Shield Termination

I/O Module in Cabinet

- Use shielded cable from MicroNet module to I/O module (FTM, etc.)
- Ground cable, direct, at MicroNet module and I/O module
- Locate as close to I/O cable entry point as possible
- Locate I/O module away from shielded analog I/O areas (> 6”)

I/O Cable w/ I/O Module in Cabinet

- Route I/O cable against cabinet metal wall from entry point to I/O module;
- If I/O cable is shielded, ground the I/O cable shield, direct, to cabinet at entry point
  - If overbraided, ground overbraid shield to cabinet - connect inner braids directly to earth ground at one point only
  - If single shield, ground shield to cabinet
  - If I/O cable is grounded direct at remote end of cable, ground the I/O cable shield, capacitively at the entry point to the cabinet
- I/O cable ground at I/O module must be the same type as at cable entry point into cabinet

I/O Module not in Cabinet

- Route cable from MicroNet module to I/O module with cable against cabinet metal wall
- Ground “MicroNet module to I/O module” cable at entry point to cabinet and at I/O module

I/O Cable w/o I/O Module in Cabinet

- Ground I/O cable shield, direct, to earth at the I/O module
  - If overbraided, ground overbraid shield to earth at the I/O module- connect inner braids at I/O module termination point. The Inner braid must still be directly grounded to earth at one point.
  - If single shield, ground shield to earth at the I/O module
- If I/O cable is grounded direct (DC coupled) at remote end of cable, ground the I/O cable shield capacitively to earth at I/O module.

9.2.5.8—Unshielded Discrete I/O

I/O Module in Cabinet

- Use Shielded cable from MicroNet module to I/O module (FTM, etc.)
- Ground cable direct at MicroNet module and I/O module
- Locate as close to I/O cable entry point as possible;
- Locate I/O module away from sensitive analog areas (> 6”);

I/O Cable w/ I/O Module in Cabinet

- Route I/O cable against cabinet metal wall from entry point to I/O module;
- Do not let other cables within 12” of unshielded discrete I/O cables if they are parallel for > 2’
- Do not let other cables within 6” of unshielded discrete I/O cables if they are parallel for less than 2’
- Limit length of unshielded I/O cable inside the cabinet. Any length over 2’ is too long
- If lengths greater than 2’ are required, special considerations should be used to separate this unshielded wiring from other circuits and minimize electromagnetic and RF emissions.

I/O Module not in Cabinet

- Route cable from MicroNet module to I/O module with cable against cabinet metal wall
- Ground “MicroNet module to I/O module” cable at entry point to cabinet and to I/O module

9.2.6—Third Party Hardware

CE Compliant to Light Industrial Levels

- Locate inside the cabinet, away from all I/O cables that enter or exit the cabinet by >12”
- Locate from all other cables > 6” away
- Use only CE compliant devices

CE Complaint to Industrial Levels

- Locate based on Zoning restrictions

9.2.7—Ethernet I/O Connections

- Use Shielded Twisted Pair (STP) category 5 Ethernet cable
- Route Ethernet cable away from all other Internal cabling and external I/O cabling
- Ground internal Ethernet cable at the CPU card and at the entry point to the cabinet

9.2.8—CAN I/O Connections

- A shielded CAN cable as defined in section 5.1.9 of volume 1 of this manual.
- Route the CAN cable away from all other Internal cabling and external I/O cabling.
- Ground the internal CAN cable shield at the entry point to the cabinet.
- AC couple the CAN cable shield to earth at each of the CAN devices external to the MicroNet cabinet.
- AC couple the CAN cable shield to earth at each of the CAN devices internal to the MicroNet cabinet.

9.2.9—Connection of Cabinet to Installation Ground

- Ensure the cabinet enclosure is electrically grounded to the plant ground system. Use as large a conductor as is possible. Use plant guidelines.

9.2.10—DIN Rail Grounding

- Provide Chassis ground to FTMs using a DIN rail ground clip.
- Install one each of these clips at the FTM end closest to the Earth ground connection point.
- Use largest gauge wire allowed by Clip and FTM.
- Maximum length of ground wire shall not exceed 5 cm/2”

9.2.11—Equipment Bonding

- DIN rail shall be electrically connected to structural frame (<2.5 mΩ) once every 30 cm/12”.
- Use a minimum of 2 screws to bond a DIN rail to cabinet frame.
- Equipment chassis shall be electrically connected to structural frame (<2.5 mΩ).

9.2.12—Safety Ground Wire Installation

- Safety wires shall be routed against the grounded cabinet structure. Locate safety ground wire 6” from unshielded cabling, 3” from internal shielded cabling, and 15 cm/6” from any I/O cabling exiting the cabinet.

9.2.13—Installation of Other Equipment, Fans, Meters, etc.

Shield Termination Schemes

- See Application Note B51204 for this information.

9.2.14—Shielded I/O Cable

- Copper tape is not reliable for shield termination.

Figure 9-5—Bottom Cable Entry Area

Figure 9-6—Door Bonding

Figure 9-7a—Cable Entry # 1

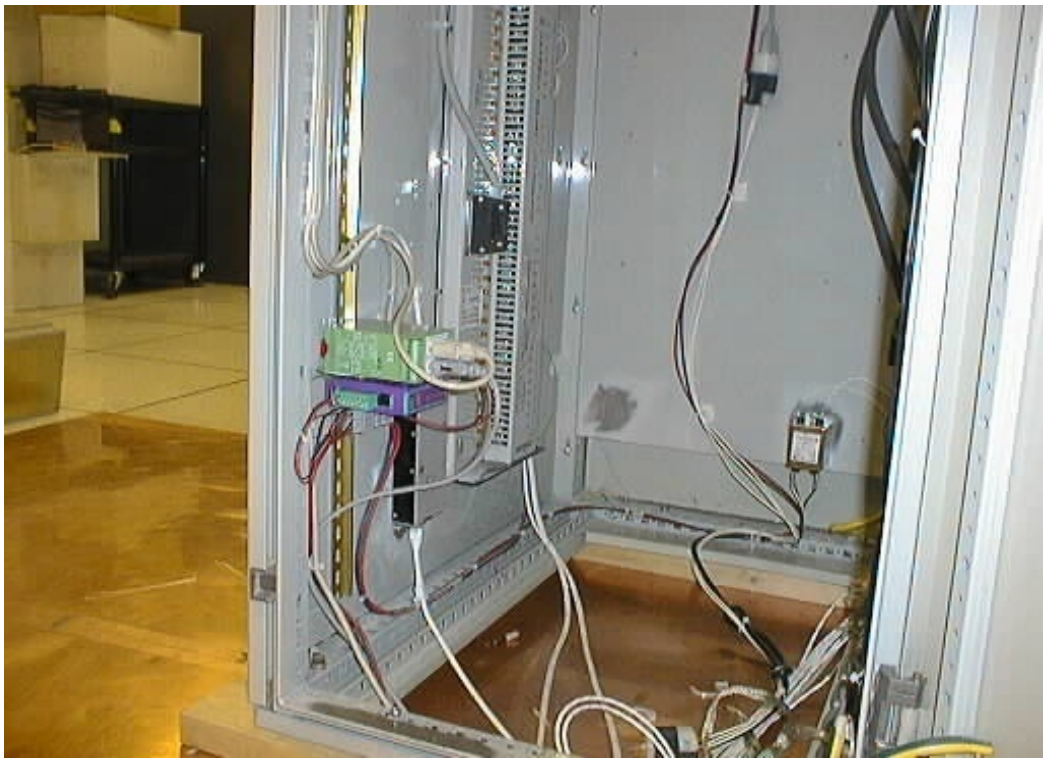

Figure 9-7b—Cable Entry # 2

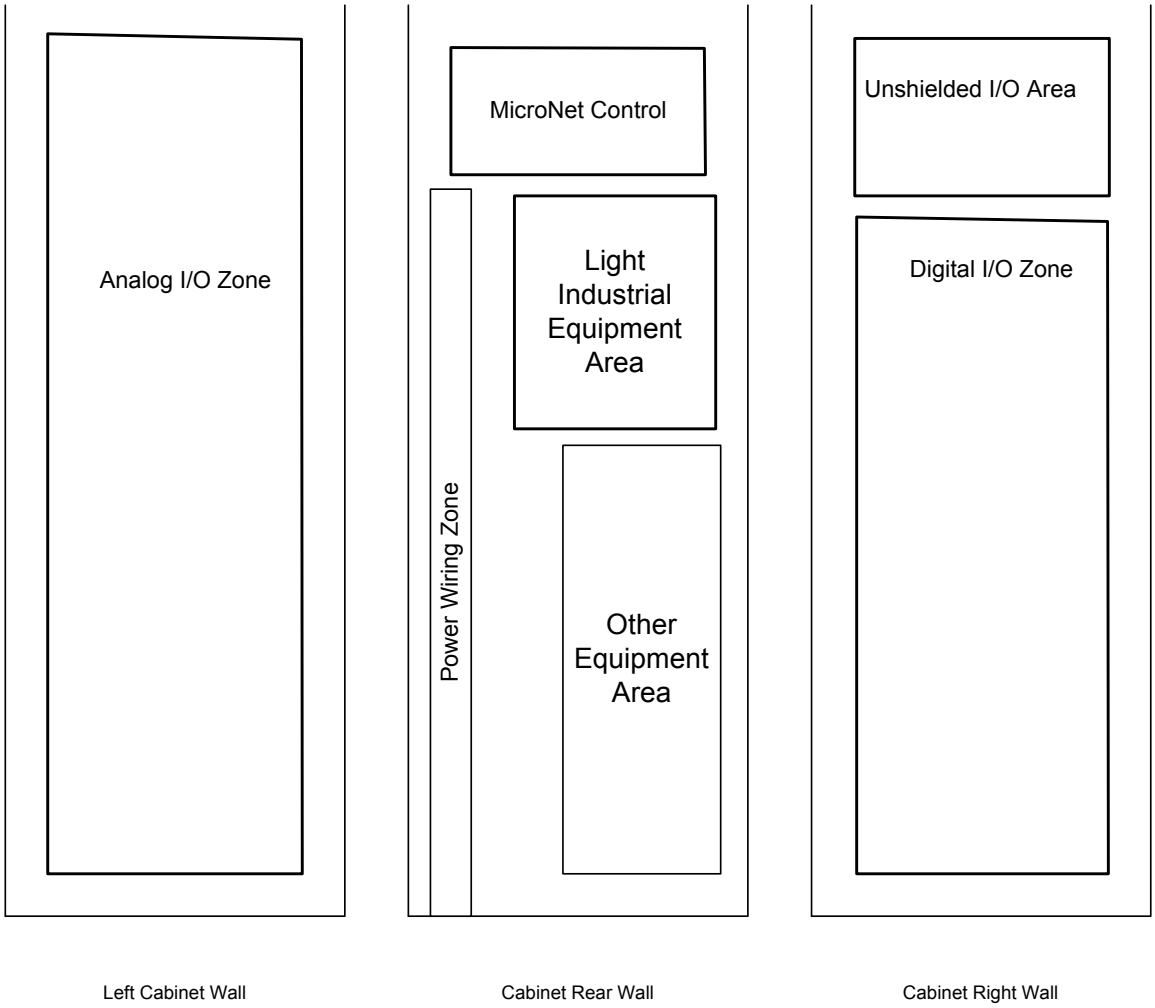

Figure 9-8—Zoning

9.3—Replacement Procedures

9.3.1—Safety Considerations

WARNING

Do not connect or disconnect while circuit is live unless area is known to be non-hazardous.

Substitution of components may impair suitability for Class I, Division applications.

Do not remove or install power supply while circuit is live unless area is known to be non-hazardous.

Do not remove or install modules while circuit is energized unless area is known to be non-hazardous.

9.3.2—Replacing a VME Module

IMPORTANT **For Simplex systems this procedure will shutdown the control system.**

WARNING **If power has not been removed from the control system, power will be active at the module and also at the cable connectors. It is recommended that the cables not be removed until after the module has been unseated. If cables are removed with power applied, care must be used to avoid shorting cable connector pins.**

WARNING **HIGH VOLTAGE—If the high voltage FTM is being used with the 48/24 Discrete I/O module, and there is 125 Vdc on the FTM terminal blocks, there will be 125 Vdc on the FTM sub D connectors and on the cable when it is connected to the FTM. For this reason, all power should be removed from the FTM terminal blocks before disconnecting any cables.**

VME Module Replacement Procedure:

1. Remove the cable saddle at the top of the chassis section. The saddle can be lifted off by removing the two screws which hold it in place.
2. Unscrew the module's captive-screw fasteners (one at the top of the module and the other at the bottom), and unseat the module by simultaneously pressing the top module handle up and the bottom module handle down.
3. Pull the module straight out along the card guide slots until it is approximately 25 mm (1 inch) from the motherboard. Disconnect the I/O cables from the module, and secure the ends to avoid damage or shorting of pins. The I/O cables use a slide latch (to disengage, slide the latch towards the top of the module).
4. Remove the module by pulling it straight out and putting it into a conductive plastic bag.
5. Prior to installing a replacement module, verify that all connector pins are parallel and straight. Install the replacement module by aligning the circuit board edges inside the card guides and pushing the module straight in until it is approximately 25 mm (1 inch) from the motherboard.
6. Connect the I/O cables to the module. The I/O cables use a slide latch (to engage, slide the latch towards the bottom of the module). Verify that the I/O cables are connected to the correct cable connector.
7. With even pressure exerted at the top and the bottom of the module, seat the module into the motherboard.
8. Tighten the two captive-screw fasteners (one at the top of the module and the other at the bottom).
9. If power was removed, reapply power.
10. Put the CPU module back in run mode.
11. Verify that the replacement MicroNet module is working correctly.
12. Reinstall the cable saddle.

9.3.3—Replacing a Field Termination Module (FTM)

WARNING **It is not possible to replace an FTM without shutting down the entire control system and the prime mover.**

WARNING **If power has not been removed from the control system, power will be active at the module and also at the cable connectors. It is recommended that the cables not be removed until after the module has been unseated. If cables are removed with power applied, care must be used to avoid shorting cable connector pins.**

WARNING **HIGH VOLTAGE—If the high voltage FTM is being used with the 48/24 Discrete I/O module, and there is 125 Vdc on the FTM terminal blocks, there will be 125 Vdc on the FTM sub D connectors and on the cable when it is connected to the FTM. For this reason, all power should be removed from the FTM terminal blocks before disconnecting any cables.**

1. Carefully—to avoid shorting cable pins—disconnect all I/O cables from the FTM, and secure cable ends to avoid damage or shorting of pins. The I/O cables use a slide latch (to disengage, slide the latch to the release position).
2. Disconnect all field wiring. Care should be taken to avoid shorting the wires.
3. Remove the FTM by inserting a screwdriver into the mounting foot and prying each foot away from the DIN rail. Install the replacement FTM.
4. Reconnect all field wiring. Refer to the Wiring Notes for the appropriate module.
5. Connect all I/O cables to the FTM, being careful to avoid shorting cable pins. Lock the connector in position by sliding the latch to the latched position.
6. If power was removed, reapply power.
7. Put the CPU module back in run mode.
8. Verify that the new FTM is working correctly.

9.3.4—Replacing a Relay Box

WARNING

If power has not been removed from the control system, power will be active at the module and also at the cable connectors. It is recommended that the cables not be removed until after the module has been unseated. If cables are removed with power applied, care must be used to avoid shorting cable connector pins.

WARNING

HIGH VOLTAGE—If there is high voltage on the relay box terminal blocks, there will be high voltage on the relay box connectors. For this reason, all power should be removed from the relay box terminal blocks before disconnecting any cables.

1. Carefully—to avoid shorting cable pins—disconnect all I/O cables from the relay box, and secure cable ends to avoid damage or shorting of pins. The I/O cables use a slide latch (to disengage, slide the latch to the release position).
2. Disconnect all field wiring. Care should be taken to avoid shorting the wires.
3. Install the replacement relay box.
4. Reconnect all field wiring.
5. Connect all I/O cables to the relay box, being careful to avoid shorting cable pins. Lock the connector in position by sliding the latch to the latched position.
6. If power was removed, reapply power.
7. Put the CPU module back in run mode.
8. Verify that the new relay box is working correctly.

9.3.5—Replacing a Receptacle-mounted Relay

WARNING

HIGH VOLTAGE—When there is high voltage on the relay contacts, there will be high voltage on and around the relay itself. For this reason, all power must be removed from the relay box before replacing the relay.

1. If possible, remove all power from the control system and the Relay module.
2. Identify the faulty relay.
3. Move the relay's hold down spring out of the way, and pull the relay out of its socket.
4. Insert a replacement relay with same manufacturer's part number into the vacated socket, and re-engage the hold down spring.
5. Restore all power if previously removed.
6. Verify that the new relay is functioning correctly.

9.3.6—Replacing an I/O Cable

IMPORTANT

This procedure will shut down the control system.

WARNING

If power has not been removed from the control system, power will be active at the module and also at the cable connectors. It is recommended that the cables not be removed until after the module has been unseated. If cables are removed with power applied, care must be used to avoid shorting cable connector pins.

WARNING

HIGH VOLTAGE—If the high voltage FTM is being used with the 48/24 Discrete I/O module, and there is 125 Vdc on the FTM terminal blocks, there will be 125 Vdc on the FTM sub D connectors and on the cable when it is connected to the FTM. For this reason, all power should be removed from the FTM terminal blocks before disconnecting any cables.

1. Remove the cable saddle at the top of the chassis section. The saddle can be lifted off by removing the two screws which hold it in place.
2. Unscrew the module's captive-screw fasteners (one at the top of the module and the other at the bottom), and release the module by simultaneously pressing the top module handle up and the bottom module handle down.
3. Unseat the module from the motherboard by pulling the module straight out along the card guide slots until it is approximately 25 mm (1 inch) from the motherboard.
4. Disconnect the I/O cable from the module, and secure the ends to avoid damage or shorting of pins. The I/O cable uses a slide latch (to disengage, slide the latch towards the top of the module).
5. Disconnect the I/O cable from the FTM or Relay/Discrete Input module. This may require removal of the cable shield termination clamp that is next to an FTM in a commercial Marine installation.
6. Install the replacement I/O cable and connect it to the FTM or Relay/Discrete Input module, securing the end to avoid shorting or damage to pins. Remember to install the cable shield termination clamp that is next to an FTM in a commercial Marine installation.
7. Connect the I/O cable to the module. The I/O cable uses a slide latch (to engage, slide the latch towards the bottom of the module). Verify that the I/O cable is connected to the correct cable connector.
8. With even pressure exerted at the top and the bottom of the module, seat the module into the motherboard.
9. Tighten the two captive-screw fasteners (one at the top of the module and the other at the bottom).
10. If power was removed, reapply power.
11. Put the CPU module back in run mode.
12. Verify that the new MicroNet module is working correctly.
13. Reinstall the cable saddle.

9.3.7—Replacing Chassis Fans

1. Installation of MicroNet Power Supply:
2. Use the following procedure to remove faulty fan from chassis

- Use a stubby (approximately 3.5" long) #2 Phillips screwdriver.
- Loosen, but do not remove, the four retaining screws holding the fan assembly to the chassis.
- Rotate fan to remove power by accessing wire quick connects.
- Remove fan and guard assembly from chassis.
- Remove guard from faulty fan, noting captive nut location.

IMPORTANT **Captive nuts should be rethreaded onto screws between fan mounting flanges to prevent loose hardware from contacting live circuits.**

- Install new fan.
- Reinstall fan assembly (flow arrows should point "UP").
- Connect RED wire to the + fan terminal and BLACK wire to – fan terminal.

IMPORTANT **Do not contact quick connect terminals with any metallic surface during reinstallation.**

MicroNet General Chassis/Power Supply Only

1. Installation of MicroNet Power Supply:

- Locate power supply a minimum of 8 cm (3") with a maximum distance of 11.4 cm (4.5") directly below the TMR chassis.

2. Use the following procedure to remove faulty fan from chassis

- Use a stubby (approximately 9 cm/3.5" long) #2 Phillips screwdriver.
- Loosen, but do not remove, the four retaining screws holding the fan assembly to the chassis.
- Rotate fan to remove power by accessing wire quick connects.
- Remove fan and guard assembly from chassis.
- Remove guard from faulty fan.
- Install new fan.
- Reinstall fan assembly (flow arrows should point "UP").
- Connect RED wire to the + fan terminal and BLACK wire to - fan terminal.

IMPORTANT **Do not contact quick connect terminals with any metallic surface during reinstallation.**

Chapter 10. Service Options

10.1—Product Service Options

If you are experiencing problems with the installation, or unsatisfactory performance of a Woodward product, the following options are available:

- Consult the troubleshooting guide in the manual.
- Contact the manufacturer or packager of your system.
- Contact the Woodward Full Service Distributor serving your area.
- Contact Woodward technical assistance (see “How to Contact Woodward” later in this chapter) and discuss your problem. In many cases, your problem can be resolved over the phone. If not, you can select which course of action to pursue based on the available services listed in this chapter.

OEM and Packager Support: Many Woodward controls and control devices are installed into the equipment system and programmed by an Original Equipment Manufacturer (OEM) or Equipment Packager at their factory. In some cases, the programming is password-protected by the OEM or packager, and they are the best source for product service and support. Warranty service for Woodward products shipped with an equipment system should also be handled through the OEM or Packager. Please review your equipment system documentation for details.

Woodward Business Partner Support: Woodward works with and supports a global network of independent business partners whose mission is to serve the users of Woodward controls, as described here:

- A **Full Service Distributor** has the primary responsibility for sales, service, system integration solutions, technical desk support, and aftermarket marketing of standard Woodward products within a specific geographic area and market segment.
- An **Authorized Independent Service Facility (AISF)** provides authorized service that includes repairs, repair parts, and warranty service on Woodward's behalf. Service (not new unit sales) is an AISF's primary mission.
- A **Recognized Engine Retrofitter (RER)** is an independent company that does retrofits and upgrades on reciprocating gas engines and dual-fuel conversions, and can provide the full line of Woodward systems and components for the retrofits and overhauls, emission compliance upgrades, long term service contracts, emergency repairs, etc.
- A **Recognized Turbine Retrofitter (RTR)** is an independent company that does both steam and gas turbine control retrofits and upgrades globally, and can provide the full line of Woodward systems and components for the retrofits and overhauls, long term service contracts, emergency repairs, etc.

A current list of Woodward Business Partners is available at **www.woodward.com/support/directory.cfm**.

10.2—Woodward Factory Servicing Options

The following factory options for servicing Woodward products are available through your local Full-Service Distributor or the OEM or Packager of the equipment system, based on the standard Woodward Product and Service Warranty (5-01-1205) that is in effect at the time the product is originally shipped from Woodward or a service is performed:

- Replacement/Exchange (24-hour service)
- Flat Rate Repair
- Flat Rate Remanufacture

Replacement/Exchange: Replacement/Exchange is a premium program designed for the user who is in need of immediate service. It allows you to request and receive a like-new replacement unit in minimum time (usually within 24 hours of the request), providing a suitable unit is available at the time of the request, thereby minimizing costly downtime. This is a flat-rate program and includes the full standard Woodward product warranty (Woodward Product and Service Warranty 5-01-1205).

This option allows you to call your Full-Service Distributor in the event of an unexpected outage, or in advance of a scheduled outage, to request a replacement control unit. If the unit is available at the time of the call, it can usually be shipped out within 24 hours. You replace your field control unit with the like-new replacement and return the field unit to the Full-Service Distributor.

Charges for the Replacement/Exchange service are based on a flat rate plus shipping expenses. You are invoiced the flat rate replacement/exchange charge plus a core charge at the time the replacement unit is shipped. If the core (field unit) is returned within 60 days, a credit for the core charge will be issued.

Flat Rate Repair: Flat Rate Repair is available for the majority of standard products in the field. This program offers you repair service for your products with the advantage of knowing in advance what the cost will be. All repair work carries the standard Woodward service warranty (Woodward Product and Service Warranty 5-01-1205) on replaced parts and labor.

Flat Rate Remanufacture: Flat Rate Remanufacture is very similar to the Flat Rate Repair option with the exception that the unit will be returned to you in “like-new” condition and carry with it the full standard Woodward product warranty (Woodward Product and Service Warranty 5-01-1205). This option is applicable to mechanical products only.

10.3—Returning Equipment for Repair

If a control (or any part of an electronic control) is to be returned for repair, please contact your Full-Service Distributor in advance to obtain Return Authorization and shipping instructions.

When shipping the item(s), attach a tag with the following information:

- return authorization number;
- name and location where the control is installed;
- name and phone number of contact person;
- complete Woodward part number(s) and serial number(s);
- description of the problem;
- instructions describing the desired type of repair.

10.3.1—Packing a Control

Use the following materials when returning a complete control:

- protective caps on any connectors;
- antistatic protective bags on all electronic modules;
- packing materials that will not damage the surface of the unit;
- at least 100 mm (4 inches) of tightly packed, industry-approved packing material;
- a packing carton with double walls;
- a strong tape around the outside of the carton for increased strength.

NOTICE

To prevent damage to electronic components caused by improper handling, read and observe the precautions in Woodward manual 82715, *Guide for Handling and Protection of Electronic Controls, Printed Circuit Boards, and Modules*.

10.4—Replacement Parts

When ordering replacement parts for controls, include the following information:

- the part number(s) (XXXX-XXXX) that is on the enclosure nameplate;
- the unit serial number, which is also on the nameplate.

10.5—Engineering Services

Woodward offers various Engineering Services for our products. For these services, you can contact us by telephone, by email, or through the Woodward website.

- Technical Support
- Product Training
- Field Service

Technical Support is available from your equipment system supplier, your local Full-Service Distributor, or from many of Woodward's worldwide locations, depending upon the product and application. This service can assist you with technical questions or problem solving during the normal business hours of the Woodward location you contact. Emergency assistance is also available during non-business hours by phoning Woodward and stating the urgency of your problem.

Product Training is available as standard classes at many of our worldwide locations. We also offer customized classes, which can be tailored to your needs and can be held at one of our locations or at your site. This training, conducted by experienced personnel, will assure that you will be able to maintain system reliability and availability.

Field Service engineering on-site support is available, depending on the product and location, from many of our worldwide locations or from one of our Full-Service Distributors. The field engineers are experienced both on Woodward products as well as on much of the non-Woodward equipment with which our products interface.

For information on these services, please contact us via telephone, email us, or use our website: **www.woodward.com/support**.

10.6—How to Contact Woodward

For assistance, call one of the following Woodward facilities to obtain the address and phone number of the facility nearest your location where you will be able to get information and service.

Electrical Power Systems

Facility	Phone Number
Australia	+61 (2) 9758 2322
Brazil	+55 (19) 3708 4800
China	+86 (512) 6762 6727
Germany:	
Kempen	+49 (0) 21 52 14 51
Stuttgart	+49 (711) 78954-0
India	+91 (129) 4097100
Japan	+81 (43) 213-2191
Korea	+82 (51) 636-7080
Poland	+48 12 618 92 00
United States	+1 (970) 482-5811

Engine Systems

Facility	Phone Number
Australia	+61 (2) 9758 2322
Brazil	+55 (19) 3708 4800
China	+86 (512) 6762 6727
Germany:	
Stuttgart	+49 (711) 78954-0
India	+91 (129) 4097100
Japan	+81 (43) 213-2191
Korea	+82 (51) 636-7080
The Netherlands	+31 (23) 5661111
United States	+1 (970) 482-5811

Turbine Systems

Facility	Phone Number
Australia	+61 (2) 9758 2322
Brazil	+55 (19) 3708 4800
China	+86 (512) 6762 6727
India	+91 (129) 4097100
Japan	+81 (43) 213-2191
Korea	+82 (51) 636-7080
The Netherlands	+31 (23) 5661111
United States	+1 (970) 482-5811

You can also contact the Woodward Customer Service Department or consult our worldwide directory (**www.woodward.com/support/directory.cfm**) for the name of your nearest Woodward distributor or service facility.

For the most current product support and contact information, please refer to the latest version of publication **51337** at **www.woodward.com/publications**.

10.7—Technical Assistance

If you need to telephone for technical assistance, you will need to provide the following information. Please write it down here before phoning:

General

Your Name_____
Site Location_____
Phone Number_____
Fax Number_____

Prime Mover Information

Engine/Turbine Model Number_____
Manufacturer_____
Number of Cylinders (if applicable)_____
Type of Fuel (gas, gaseous, steam, etc)_____
Rating_____
Application_____

Control/Governor Information

Please list all Woodward governors, actuators, and electronic controls in your system:

Woodward Part Number and Revision Letter
_____
Control Description or Governor Type
_____
Serial Number _____

Woodward Part Number and Revision Letter
_____
Control Description or Governor Type
_____
Serial Number _____

Woodward Part Number and Revision Letter
_____
Control Description or Governor Type
_____
Serial Number _____

If you have an electronic or programmable control, please have the adjustment setting positions or the menu settings written down and with you at the time of the call.

Appendix A. Matrix of Modules with Compliance Information

The "X" indicates approval from the agency shown in the columns.

Part No	Status	Description	Extended Description	UL	ATEX	CE (LVD)	CE (EMC)	ABS	DNV	LRS
1604-813	A	BLOCK	SECTIONAL EARTH/GRND TERM.			x	x	x	x	x
1730-221	A	RELAY	GENERAL PURPOSE RELAY			x	x			
3799-301	A	PANEL	NETCON IIIB VME BLANK			n/a	x	x	x	x
5417-028	A	CABLE	NETCON LOW DENSITY ANALOG BLACK 10 FT			n/a	x	x	x	x
5417-1105	A	CABLE	MICRONET HIGH DENSITY ANALOG/DISCRETE GRA 10 FT UL			n/a	x	x	x	x
5441-693	A	MODULE	HD DISCRETE I/O FTM (24 IN/12 OUT)			x	x			
5453-829	A	CHASSIS	MICRONET PLUS 8 SLOT, REDUND WITH SMART FANS	x	x	x	x		x	
5466-253	A	MODULE	ANALOG COMBO (TMR)	x		n/a	x	x	x	x
5466-257	A	MODULE	HIGH DENSITY ANALOG I/O (TMR)	x				x	x	x
5466-258	A	MODULE	SIMPLEX DISCRETE I/O	x	x	n/a	x	x	x	x
5466-332	A	MODULE	HIGH DENSITY ANALOG I/O	x	x	n/a	x	x	x	x
5466-1000	A	MODULE	POWER SUPPLY, 2 SLOT, 24 VDC INPUT, MICRONET-PLUS	x	x	x	x		x	
5466-1001	A	MODULE	POWER SUPPLY, 2 SLOT, 110 VAC/125 VDC INPUT, MICRONET-PLUS	x	x	x	x		x	
5466-1002	A	MODULE	POWER SUPPLY, 2 SLOT, 220VAC INIPUT, MICRONET-PLUS	x	x	x	x		x	
5466-1035	A	MODULE	MICRONET CPU5200 (POWERPC MPC5200, 400MHZ, 64 MB FLASH, 128 MB RAM, DUAL CAN)	x	x	x	x		x	
5501-365	A	BOARD	ANALOG COMBO TMR FTM	x		n/a	x	x	x	x
5501-372	A	BOARD	HIGH DENSITY ANALOG I/O TRIPLEX FTM	x				x	x	x

Updated: December 12, 2006 (file: 00372-04-07-01.xls)

Appendix B. Environmental Specifications

Operating Temperature for the MicroNet™ Control using the 68040/060 CPU	0 to +55 °C (+32 to +131 °F), using the 68040/060 CPU, still air, no external heat loads Lloyd's: ENV 2
Operating Temperature for the MicroNet Control using the NT CPU	0 to +50 °C (+32 to +122 °F), with moving airflow as provided by MicroNet fans
Operating Temperature for the MicroNet Plus Control using the 5200 CPU	0 to +55 °C (+32 to +131 °F), with moving airflow as provided by MicroNet fans

NOTICE **Continuous operation with insufficient airflow or higher operating temperatures will lead to reduced reliability and possible damage.**

Storage Temperature	–40 to +105 °C (–40 to +221 °F) (except CPU module: –20 to +45 °C (–4 to +113 °F) to maximize real time clock battery life). [NT CPU: –40 to +85 °C (–40 to 185 °F)] Component life is adversely affected by high temperature, high humidity environments. Room temperature storage is recommended for long life. If unit is to be stored for a long period of time, operating power must be applied at least once every 18–24 months.
Humidity (MicroNet)	Lloyd's Register Test Specification No. 1, 1996, Humidity Test 1 (2 cycles 20–55 °C at 95% RH non-condensing, over 48 hours) EN 50178 (96 hours @ 93 +2 -3% RH @ 40 °C (104 °F))
Humidity (MicroNet Plus)	Lloyd's Register Test Specification No. 1, 2002, Humidity Test 1 (2 cycles 20–55 °C at 95% RH non-condensing, over 48 hours) EN 50178 (96 hours @ 93 +2 -3% RH @ 40 °C (104 °F))
Vibration (MicroNet)	Lloyd's Register Test Specification No. 1, 1996, Vibration Test 1 (5–13.2 Hz, ±1 mm; 13.2–100 Hz, ±0.7 g) EN 50178 vibration test 1 (10–57 Hz @ 0.075 mm amplitude and 57–150 Hz @ 1 g, 10 sweeps per axis at 1 octave/minute)
Vibration (MicroNet Plus)	Lloyd's Register Test Specification No. 1, 2002, Vibration Test 1 (3–16 Hz, ±1 mm; 16–100 Hz, ±1.0 g) EN 50178 vibration test 1 (10–57 Hz @ 0.075 mm amplitude and 57–150 Hz @ 1 g, 10 sweeps per axis at 1 octave/minute)
Shock	US MIL-STD-810C, Figure 516.2-1 procedure 1b (15 g 11 ms half sine pulse)
Air Quality	Pollution Degree 2
Altitude (max.)	4000 m
Installation Overvoltage Rating	Category II
Ingress Protection	In accordance with the requirements of IP20 as defined in IEC 529, unless mounted in a protective enclosure.
Sound Level	Less than 70 dBA
Weight	MicroNet Simplex and MicroNet Plus I/O Chassis Weight (varies with module set, and may require 2 people to lift safely): 22 kg (48 lb) MicroNet TMR/5009 Main Power Supply Chassis Weight (varies with module set): 8 kg (17 lb)
Dielectric Withstand	24 V power supply: 707 Vdc from power input to chassis AC/DC and HVAC version: 2200 Vdc from power input to chassis

WARNING **Ground leakage exceeds 3.5 mA. Protective earth grounding is required.**

Appendix C. Declarations

DECLARATION OF CONFORMITY
According to EN 45014

Manufacturer's Name:	WOODWARD GOVERNOR COMPANY (WGC) Industrial Controls Group
Manufacturer's Address:	1000 E. Drake Rd. Fort Collins, CO, USA, 80525
Model Name(s)/Number(s):	MicroNet™ Plus Digital Control Systems when installed in a non-EMI cabinet, 18-36 VDC.
Conformance to Directive(s):	89/336/EEC COUNCIL DIRECTIVE of 03 May 1989 on the approximation of the laws of the Member States relating to electromagnetic compatibility. 94/9/EC COUNCIL DIRECTIVE of 23 March 1994 on the approximation of the laws of the Member States concerning equipment and protective systems intended for use in potentially explosive atmospheres.
Applicable Standards:	EN61000-6-2, 2001: EMC Part 6-2: Generic Standards - Immunity for Industrial Environments EN61000-6-4, 2001: EMC Part 6-4: Generic Standards - Emissions for Industrial Environments EN60079-15, 2003: Electrical apparatus for explosive gas atmospheres – Part 15: Type of protection 'n'

We, the undersigned, hereby declare that the equipment specified above conforms to the above Directive(s).

MANUFACTURER

Signature

Douglas W. Salter
Full Name

Engineering Manager
Position

WIC, Fort Collins, CO, USA
Place

10/13/06
Date

5-09-1183 Rev 6, 16-Oct-2002 00372-04-EU-02-01

DECLARATION OF CONFORMITY
According to EN 45014

Manufacturer's Name:	WOODWARD GOVERNOR COMPANY (WGC) Industrial Controls Group
Manufacturer's Address:	1000 E. Drake Rd. Fort Collins, CO, USA. 80525
Model Name(s)/Number(s):	MicroNet™ Plus Digital Control Systems, when installed in a non-EMI cabinet, 88-264 VAC, and 100-300 VDC.
Conformance to Directive(s):	89/336/EEC COUNCIL DIRECTIVE of 03 May 1989 on the approximation of the laws of the Member States relating to electromagnetic compatibility. 73/23/EEC COUNCIL DIRECTIVE of 19 February 1973 on the harmonization of the laws of the Member States relating to electrical equipment designed for use within certain voltage limits. 94/9/EC COUNCIL DIRECTIVE of 23 March 1994 on the approximation of the laws of the Member States concerning equipment and protective systems intended for use in potentially explosive atmospheres.
Applicable Standards:	EN61000-6-2, 2001: EMC Part 6-2: Generic Standards - Immunity for Industrial Environments EN61000-6-4, 2001: EMC Part 6-4: Generic Standards - Emissions for Industrial Environments EN61010-1, 2001: Safety requirements for electrical equipment for measurement, control, and laboratory use - Part 1:General Requirements EN60079-15, 2003: Electrical apparatus for explosive gas atmospheres – Part 15: Type of protection 'n'

We, the undersigned, hereby declare that the equipment specified above conforms to the above Directive(s).

MANUFACTURER

Signature

Douglas W. Salter
Full Name

Engineering Manager
Position

WIC, Fort Collins, CO, USA
Place

10/13/06
Date

5-09-1183 Rev 6, 16-Oct-2002 00372-04-EU-02-02

DECLARATION OF CONFORMITY

Manufacturer's Name:	WOODWARD GOVERNOR COMPANY (WGC) Industrial Controls Group
Manufacturer's Address:	1000 E. Drake Rd. Fort Collins, CO, USA, 80525
Model Name(s)/Number(s):	LinkNet Modules: Termination Module, 9905-760; T/C Input, 9905-966, -967; Analog Input, 9905-968, -969; RTD, 9905-970, -678; Discrete In, 9905-971; Analog Output, 9905-972; Discrete Out, 9905-973.
Conformance to Directive(s):	2004/108/EC COUNCIL DIRECTIVE of 15 December 2004 on the approximation of the laws of the Member States relating to electromagnetic compatibility and all applicable amendments. 94/9/EC COUNCIL DIRECTIVE of 23 March 1994 on the approximation of the laws of the Member States concerning equipment and protective systems intended for use in potentially explosive atmospheres.
Applicable Standards:	EN61000-6-2, 2005: EMC Part 6-2: Generic Standards - Immunity for Industrial Environments EN61000-6-4, 2001: EMC Part 6-4: Generic Standards - Emissions for Industrial Environments EN60079-15, 2005: Electrical apparatus for explosive gas atmospheres – Part 15: Type of protection 'n'

We, the undersigned, hereby declare that the equipment specified above conforms to the above Directive(s).

MANUFACTURER

Signature

Douglas W. Salter
Full Name

Engineering Manager
Position

WGC, Fort Collins, CO, USA
Place

3/28/07
Date

5-09-1183 Rev 11, 24-May-06 00117-04-EU-02-01.doc

WOODWARD
Industrial Controls

Woodward Governor Company
1000 East Drake Road
Fort Collins, CO 80525
Phone: 970-482-5811
Fax: 970-498-3058
Website: www.woodward.com

Declaration of Incorporation

Woodward Governor Company
1000 East Drake Rd.
Fort Collins, CO 80525
United States of America

Product: MicroNet

The undersigned hereby declares, on behalf of Woodward Governor Company of Loveland, Colorado, that the above-referenced product is in conformity with the following EU Directives as they apply to a component:

98/37/EEC (Machinery)

This product is intended to be put into service only upon incorporation into an apparatus/system that itself will meet the requirements of the above Directives and bears the CE mark.

Manufacturer

Jane E. Evans
Signature

Jane E. Evans
Full Name

Mechanical Compliance Engineer
Position

Fort Collins, CO, USA
Location

6 August 1999
Date

СИСТЕМА СЕРТИФИКАЦИИ ГОСТ Р
ГОССТАНДАРТ РОССИИ

СЕРТИФИКАТ СООТВЕТСТВИЯ

№ РОСС US.МЛ03.В00604

Срок действия с 08.07.2008 по 07.07.2011

7754196

ОРГАН ПО СЕРТИФИКАЦИИ РОСС RU.0001.11МЛ03
НП "СЕРТИФИКАЦИОННЫЙ ИСПЫТАТЕЛЬНЫЙ ЦЕНТР" (ОС НП "СИЦ")
195112, Санкт-Петербург, Малоохтинский пр., д. 68, тел. (812) 528-08-83; факс (812) 331-07-73
Почтовый: 195112, Санкт-Петербург, ул. Стахановцев, д. 1 /www.sic.org.ru/

ПРОДУКЦИЯ Программно - технический комплекс
модель MicroNet Plus
Серийный выпуск

код ОК 005 (ОКП):
42 5200

СООТВЕТСТВУЕТ ТРЕБОВАНИЯМ НОРМАТИВНЫХ ДОКУМЕНТОВ
ГОСТ Р МЭК 60950-2002, ГОСТ 26329-84 (п.п. 1.2, 1.3),
ГОСТ Р 51318.22-99, ГОСТ Р 51318.24-99,
ГОСТ Р 51317.3.3-99, ГОСТ Р 51317.3.2-2006 (р.р. 6, 7)

код ТН ВЭД России:
9032 89 603 0

ИЗГОТОВИТЕЛЬ Woodward Governor Co
1000 East Drake Road, Fort Collins CO 80525, USA

СЕРТИФИКАТ ВЫДАН Woodward Governor Co
1000 East Drake Road, Fort Collins CO 80525, USA
тел. (970) 498-5811; факс (970) 498-3058

НА ОСНОВАНИИ протокола испытаний № 06068-08-СИЦ от 27.06.2008
ИЛ НП "СИЦ"; рег. № РОСС RU.0001.21МЕ95 (до 16.01.2011 г.)

ДОПОЛНИТЕЛЬНАЯ ИНФОРМАЦИЯ Маркировка знаком соответствия по ГОСТ Р 50460-92 производится на изделии (упаковке) и в сопроводительной документации.

Руководитель органа — подпись — М.Е. Должков (инициалы, фамилия)

Эксперт — подпись — Э.И. Троянская (инициалы, фамилия)

Сертификат имеет юридическую силу на всей территории Российской Федерации

Appendix D. Acronyms

A	Ampere
ac	Alternating Current
Act	Actuator
A/D	Analog-to-Digital
AD590	Temperature Measurement Device
AI	Analog Input
AM	Amplitude Modulated
App	Application
AO	Analog Output
ASTM	American Society of Testing and Materials
AWG	American Wire Gauge
Baud	Bits per Second (Data Transmission Rate)
BIOS	Basic I/O Software
BOM	Bill of Materials
CAN	Control Area Network
CAT	Category
COAX	Co-axial
cm	Centimeter
CD-ROM	Computer Disc Read Only Memory
CE	Symbol representing compliance to the EU Directives
Ch	Channel
CJ	Cold Junction
CMRR	Common Mode Rejection Ratio
COM	Communication
Combo	Combination
CPU	Central Processor Unit
CSR	Control Status register
dB	Decibel
dc	Direct Current
DCS	Distributed Control System
DFB	Dual Feedback
DLE	Dry Low Emissions
DI	Discrete Input
DIN	Deutsche Institut für Normung
DIO	Discrete Input/Output
DIP	Dual Inline Package
DO	Discrete Output
DPDT	Double Pole/Double Throw
DRAM	Dynamic Random Access Memory
Drv	Driver
DSP	Digital Signal Processor
DTR	Data Terminal Ready
DUART	Dual Universal Asynchronous Receive/Transmit
EIA	Electronic Industry Alliance
EM	Woodward Actuation Family (Electric Motor)
EM-35	Woodward Actuation Model (Electric Motor)
EMC	Electromagnetic Compatibility
EMI	Electromagnetic Interference
EN	Europäische norm (European Norm)
ESD	Electrostatic Discharge
EU	European Union

FDBK	Feedback
FDOC	Fixed Disk on Chip
FS	Full Scale
FTM	Field Termination Module
FPU	Floating Point Unit
G	Force of Gravity
GAP™	Woodward Graphical Application Program(mer)
GND	Ground
GS	Woodward Gas Valve Family
HDVIM	High Density Versatile Input Module
HMI	Human Machine Interface
Hz	Hertz (cycles per second)
HD	High Density
HV	High Voltage
HVAC	High Voltage Alternating Current
IEC	International Electro technical Commission
IEEE	Institute of Electronic & Electrical Engineers
IP	Internet Protocol
I/O	Input/Output
IOLOCK	I/O Control Signal on MicroNet™ Motherboard
ISO	International Standards Organization
KB	Data Transmission Rate / 1000
KBAUD	Same as KB
LED	Light Emitting Diode
LinkNet	Woodward Local Area Network Product Line
LM	GE Gas Turbine Family
LPT1	Line Printer Terminal #1
LQ	Woodward Liquid Valve Family
LV	Low Voltage
LVD	Low Voltage Directive
LVDT	Linear Variable Differential Transformer
mA	Milliampere
Max	Maximum
Mbps	Million Bits per Second
MFT	Minor Frame Timer
Min	Minimum
MPU	Magnetic Pick-up
ms	Millisecond
mV	Millivolt
MUX	Multiplex(er)
NEC	(US) National Electrical Code
NTCPU	CPU That Runs Microsoft NT Operating System
NT Pentium	Same as NTCPU
NV	Non-volatile
OPC	OLE for Process Control (Communication Protocol)
OPSYS	Operating System
O/S	Overspeed
PC	Personal Computer
PC104	Type of Bus Structure Used in PC Industry
PCB	Printed Circuit Board
PCM	Position Controller Module
PCMCIA	Personal Computer Memory Card International Association
PE	Protective Earth
PPM	Parts Per Million
PROM	Programmable Read Only Memory
PS	Power Supply
PS/2	IBM trademark for keyboard/mouse port

PWM	Pulse Width Modulation
RAM	Random Access Memory
RTD	Resistance Temperature Device
RTN	Real Time Network
RVDT	Rotary Variable Differential Transformer
Rx	Receive
SAE	Society of Automotive Engineers
SFB	Single Feedback
Shld	Shield
Simplex	Control scheme that utilizes one core processor
SIO	Serial Input/Output
SPDT	Single Pole/Double Throw
SSTP	Shielded Shielded Twisted Pair
STP	Shielded Twisted Pair
SYSCON	System Controller
TC	Thermocouple
TCP/IP	Transmission Control Protocol/Internet Protocol
TM	Woodward Actuator Family (Torque Motor)
TM100	Woodward Actuator Model (Torque Motor)
TMR	Triple Modular Redundant
Tx	Transmit
USB	Universal Serial Bus
UART	Universal Asynchronous Receive/Transmit
UL	Underwriters Laboratories
Vac	Volts ac (Alternating Current)
Vdc	Volts dc (Direct Current)
VFD	Vacuum Florescent Display
VME	VERSA Module Eurocard
VRMS	Volts RMS (root mean square)
W	Watt
Xcvr	Transceiver
Xdcr	Transducer
68030	Motorola Microprocessor
68040	Motorola Microprocessor
µA	Microampere

We appreciate your comments about the content of our publications.

Send comments to: icinfo@woodward.com

Please reference publication 26489V1.

PO Box 1519, Fort Collins CO 80522-1519, USA
1000 East Drake Road, Fort Collins CO 80525, USA
Phone +1 (970) 482-5811 • Fax +1 (970) 498-3058

Email and Website—www.woodward.com

**Woodward has company-owned plants, subsidiaries, and branches,
as well as authorized distributors and other authorized service and sales facilities throughout the world.**

Complete address / phone / fax / email information for all locations is available on our website.

2009/9/Makuhari